NAHALSAN/PARAX

NAHALSAN is not only about standardized production but about the passion for metalworking. Using our **experience and know-how** we provide our professional clients with a great variety of solutions to fit their needs.

NAHALSAN - It is a meaningful name, reminds us industial way of thinking could be another form of art.

Aware that potential as a manufacturer of sheet metal part items, the company was acclaimed for its professional production.

Nahalsan chairs and tables style always attracts attention .

1 derakhti st
Andisheh Provence
Tehran Iran

+98 21 67293
info@nahalsan.com
www.nahalsan.com

Seats

Tables

Accessories

Kids

Shelves

Lights

Beds and Bench

Stairs

BBQ

Space Frames

2016

2021 Couleurs / Colors

Trends

001	002	003	004	005
Mat	*Mat fine texture*	*Mat*	*Mat fine texture*	*Mat fine texture*
006	007	008	009 NEW COLOR	010 NEW COLOR
Mat	*Mat fine texture*	*Mat fine texture*	*Mat fine texture*	*Mat fine texture*
011	012	013	014 NEW COLOR	015
Mat fine texture	*Mat fine texture*	*Mat fine texture*	*Mat fine texture*	*Mat fine texture*
016	017	018	019	020

Essentials *Matt / Mat fine texture*

01

02

NEW COLOR

03

04

05

06

07

08

09

010

Varnish

11

22

33

KNOW-HOW

NAHALSAN/PARAX products have remained true to the values and origins. All products are designed, formed, stamped, joined and assembled at the factory or flat to be assembled by costumer.

The furniture becomes authentic fashionable , colour , interiors and exteriors, solidity and lightness, practical meaning and the avant-garde.

The factory is **CE** classified.

The company is working under needed **ISO** norms ans standards.

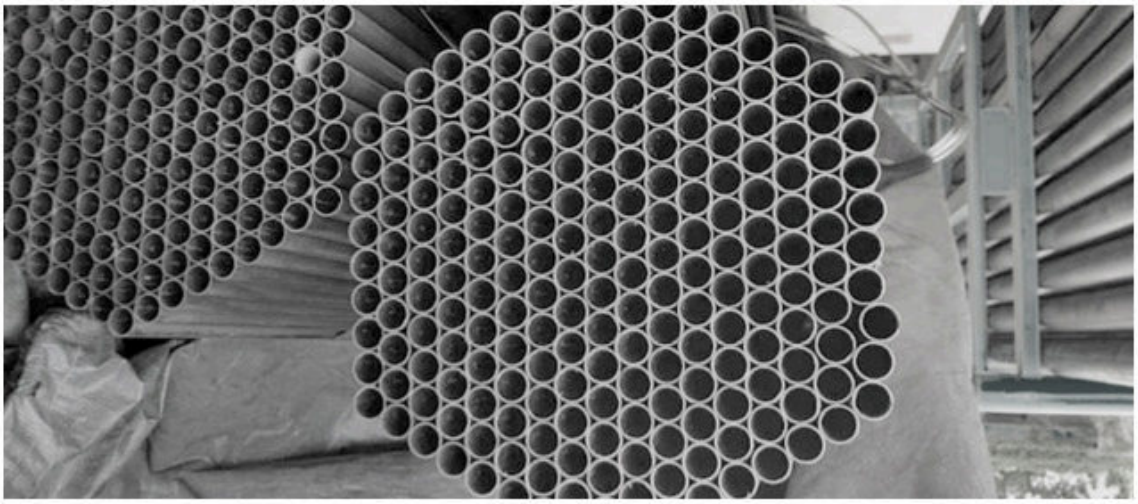

At **PARAX/NAHALSAN**,language of emotion:**enthusiastic, poetic**… With a color chart that includes 30 colors: **Mat, Brillant and Mat Fine Texture**.

Metal

Acier

Inox

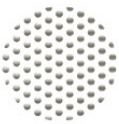

Perforé

Complementary materials

Chêne

Hêtre

Iroko

Marbre de carrare

Miroir

PARAX

ideas for contemporary life

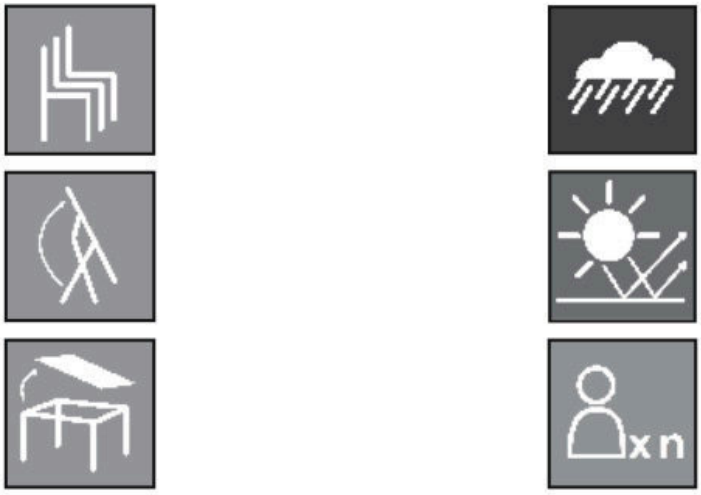

Seats

NAVALSUN

PARAX
ideas for contemporary life

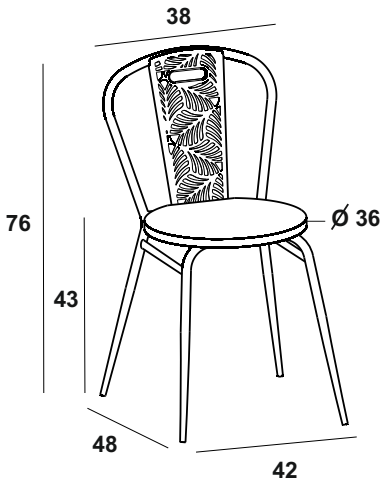

Javan - Steel

PRO CODE	WEIGHT (kg)
BR01A00111	3.9

PARAX
ideas for contemporary life

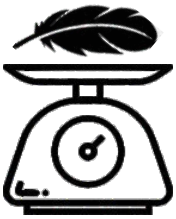

Javan - Aluminium

PRO CODE	WEIGHT (kg)
BR01A00161	2.6

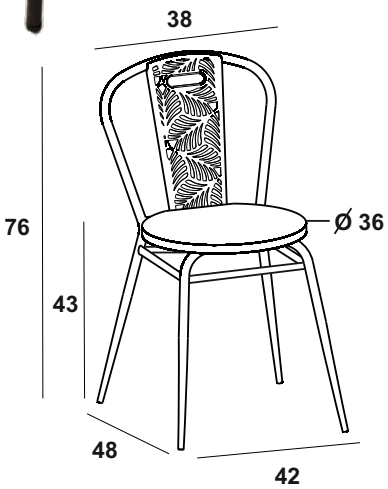

PARAX
ideas for contemporary life
PARAX

PARAX
ideas for contemporary life

Yas (Thermowood) -

H (cm)	PRO CODE
60	BW01A00133
70	BW01A00134
80	BW01A00135

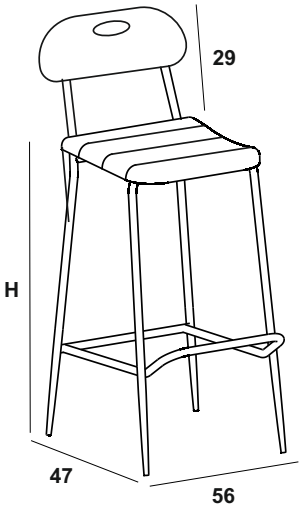

PARAX
ideas for contemporary life

Pine 1400 - Steel

PRO CODE	WEIGHT (kg)
BS01A00110	4.8

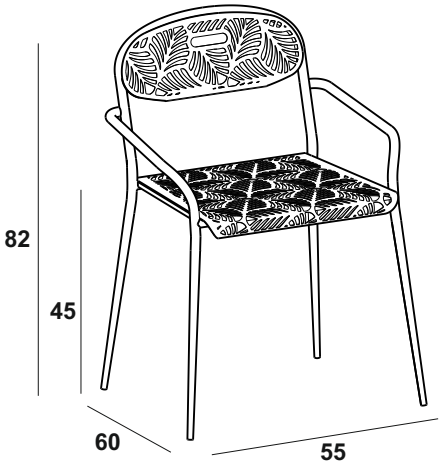

Expand the Ideas

Metal, wood, marble, textile,ceramic,… Each material has been chosen for its superior quality and capacity to last, in both indoor and outdoor conditions. Metal has always been at the center of NAHALSAN/PARAX's expertise and esthetic style. gentle touch, highlight its strength and make it look even better.

PARAX
ideas for contemporary life

Pine 1400 - Aluminium

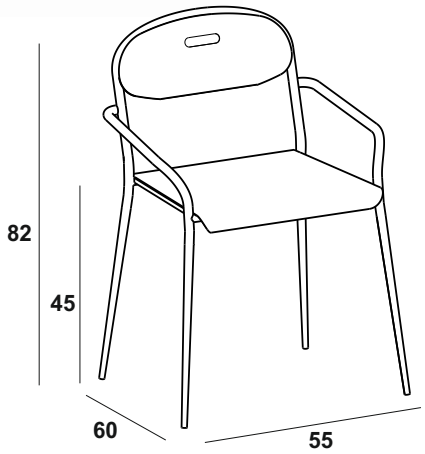

PARAX
ideas for contemporary life

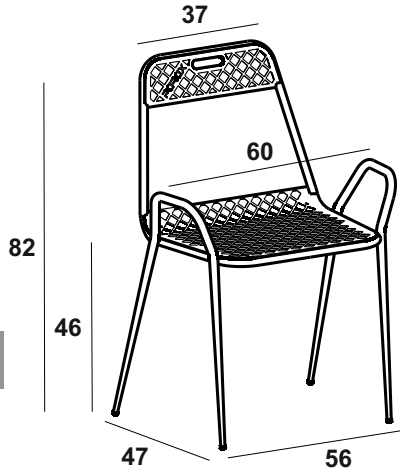

Nasim Plus

PRO CODE	WEIGHT (kg)
AF01A001D1	5.1

PARAX
ideas for contemporary life

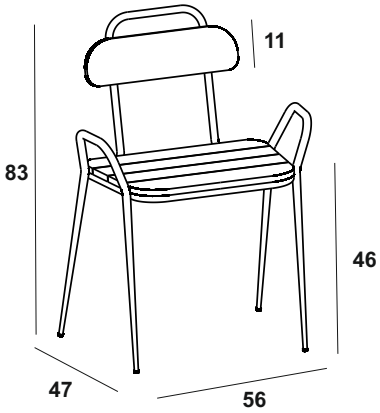

Nasim Thermowood

PRO CODE	WEIGHT (kg)
AF01A006C1	3.8

PARAX
ideas for contemporary life

Nasim

TYPE	PRO CODE	WEIGHT (kg)
ساده	AF01A00121	6.5
فول پانچ	AF01A00111	4.1
X5	AF01A00131	5.6
کلاسیک	AF01A00171	5.5

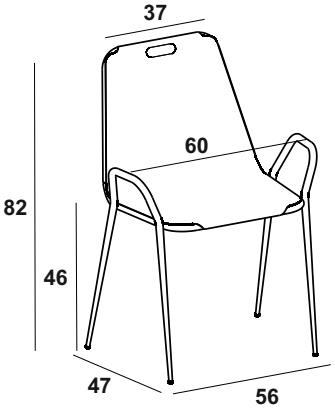

PARAX
ideas for contemporary life

PARAX
ideas for contemporary life

Versailles

PRO CODE

AF01A00181

WEIGHT (kg)

6.5

Relaxi

PRO CODE

AF01A001A4

WEIGHT (kg)

3.9

PARAX
ideas for contemporary life

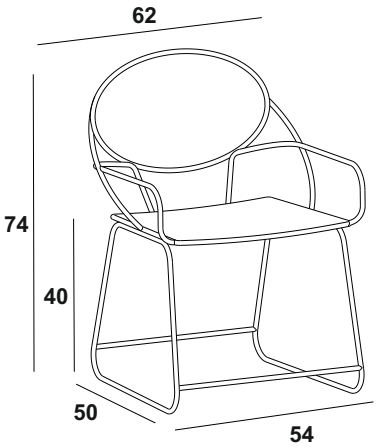

Panda

PRO CODE

BJ01A00111

WEIGHT (kg)

5.5

PARAX
ideas for contemporary life

Panda Front

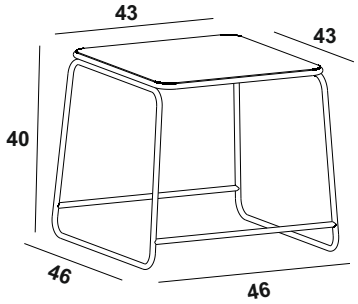

PRO CODE

BJ01A00121

WEIGHT (kg)

3.9

پاراکس
PARAX

PARAX
ideas for contemporary life

Folding Chair (Alu Seat)

TYPE	PRO CODE	WEIGHT (kg)
آلومینیومی	AV01A00100	5.3

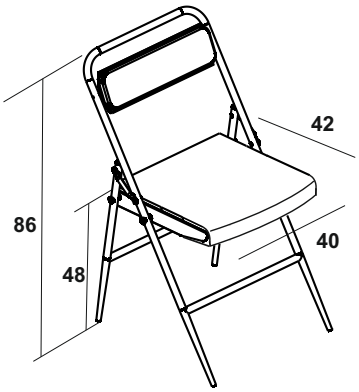

PARAX
ideas for contemporary life

Folding Chair (Thermowood Seat)

TYPE	PRO CODE	WEIGHT (kg)
	AV01A00610	5
	AV01A00680	6.5

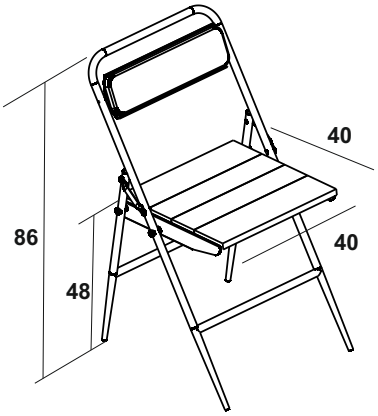

PARAX

ideas for contemporary life

PARAX
ideas for contemporary life

Counter Chair (Folding Design)

PRO CODE	WEIGHT (kg)
AV01A00193	6.9

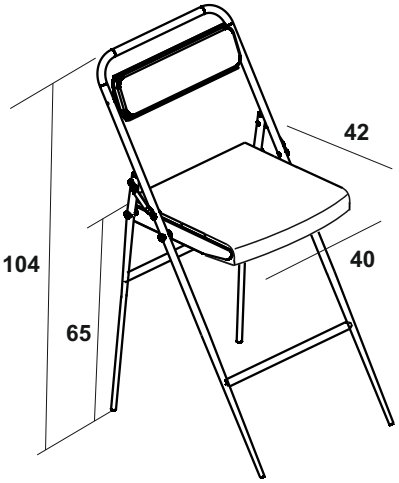

PARAX
ideas for contemporary life

Bita (Simple)

45 cm

PRO CODE

AD01A00111

WEIGHT (kg)

4.5

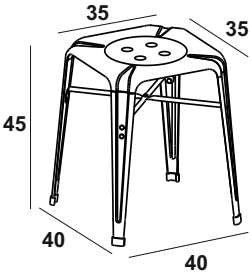

65 cm

PRO CODE

AD01A00112

WEIGHT (kg)

5.5

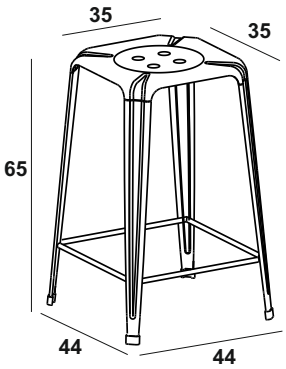

PARAX
ideas for contemporary life

Bita (With Backrest)

45 cm

PRO CODE

AD01A00121

WEIGHT (kg)

5.2

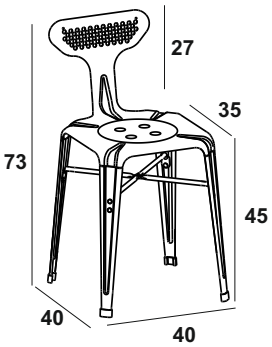

65 cm

PRO CODE

AD01A00122

WEIGHT (kg)

6.2

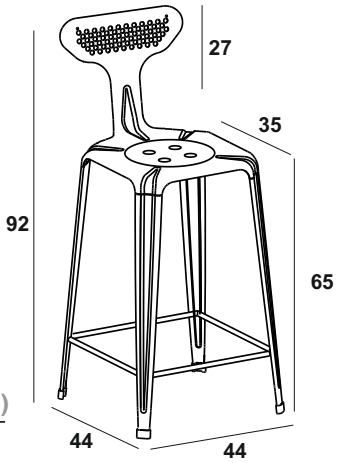

PARAX
ideas for contemporary life

Bita (With Handle)

TYPE	PRO CODE	WEIGHT (kg)
45 cm	AD01A00131	5.8
65 cm	AD01A00132	6.8

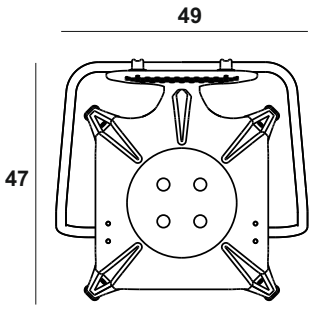

PARAX
ideas for contemporary life

Navid (Simple)

45 cm

PRO CODE

AE01A00111

WEIGHT (kg)

5.9

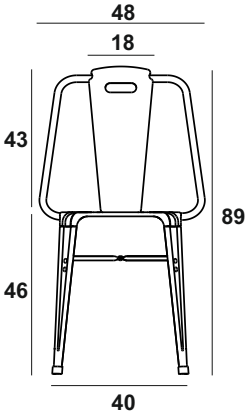

65 cm

PRO CODE

AE01A00112

WEIGHT (kg)

6.6

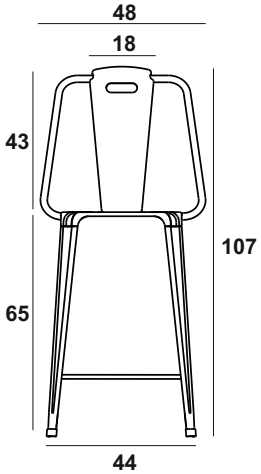

PARAX
ideas for contemporary life

Navid (Punch)

45 cm

PRO CODE

AE01A00141

WEIGHT (kg)

5.6

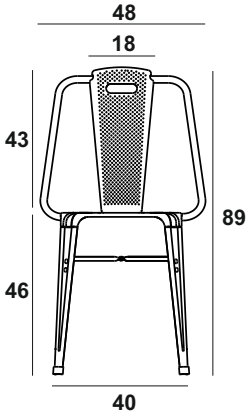

65 cm

PRO CODE

AE01A00142

WEIGHT (kg)

6.3

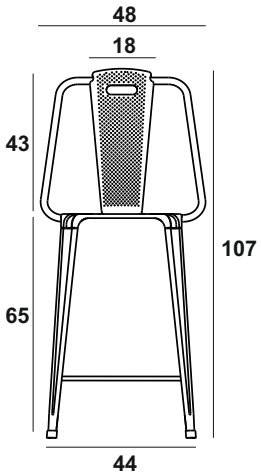

PARAX
ideas for contemporary life

Navid (Leaf)

45 cm

PRO CODE

AE01A00121

WEIGHT (kg)

5.7

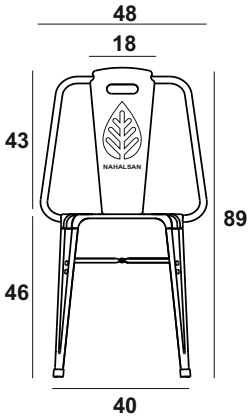

65 cm

PRO CODE

AE01A00122

WEIGHT (kg)

6.4

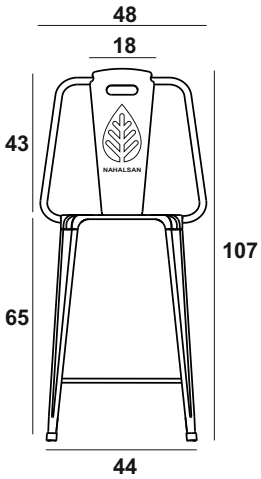

PARAX
ideas for contemporary life

Navid (Stone)

45 cm

PRO CODE

AE01A00131

WEIGHT (kg)

5.5

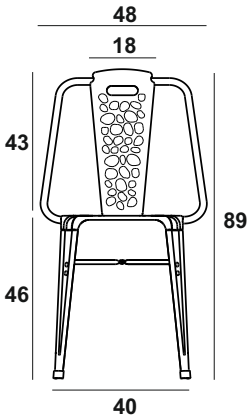

65 cm

PRO CODE

AE01A00132

WEIGHT (kg)

6.2

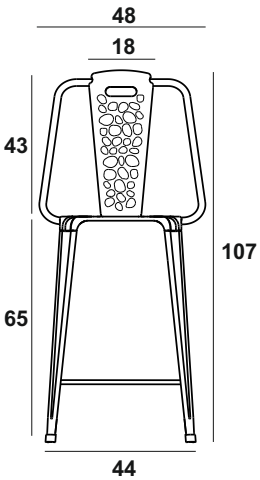

PARAX
ideas for contemporary life

Navid (Peacock)

45 cm

PRO CODE

AE01A00171

WEIGHT (kg)

6.7

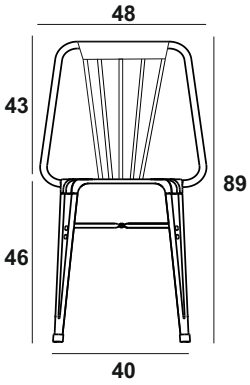

65 cm

PRO CODE

AE01A00172

WEIGHT (kg)

7.4

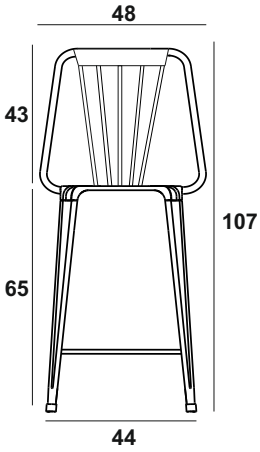

PARAX
ideas for contemporary life

Navid (Customer Logo)

45 cm

PRO CODE

AE01A00161

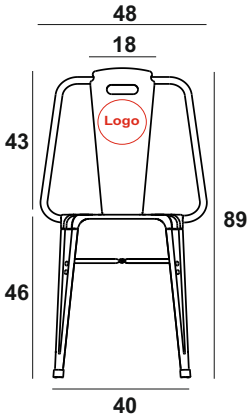

65 cm

PRO CODE

AE01A00162

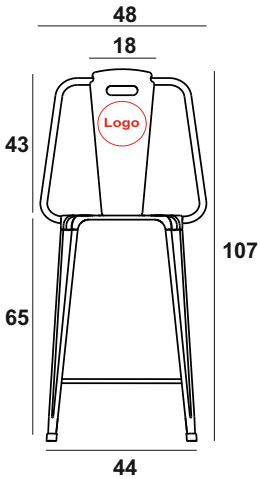

PARAX

ideas for contemporary life

PARAX

ideas for contemporary life

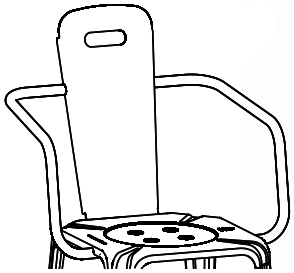

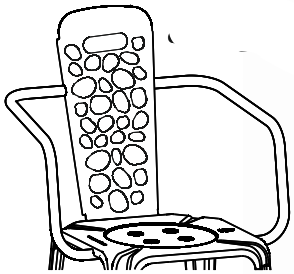

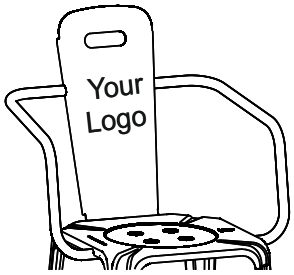

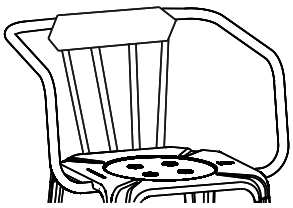

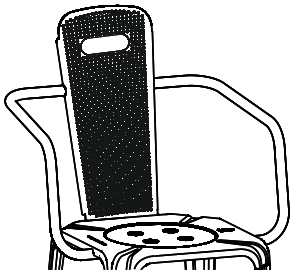

PARAX
ideas for contemporary life

Tiam 45cm

TYPE	PRO CODE	WEIGHT (kg)
	CC01A00111	6.1
	CC01A00131	5.9
	CC01A00171	5.7
	CC01A00151	5.8
	CC01A00191	6.9
	CC01A001B1	—

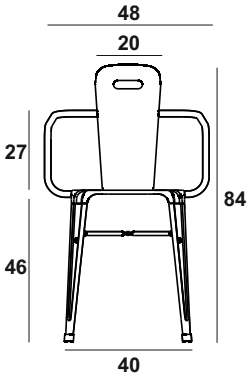

PARAX
ideas for contemporary life

Tiam 65cm

TYPE	PRO CODE	WEIGHT (kg)
	CC01A00112	6.8
	CC01A00132	6.6
	CC01A00172	6.4
	CC01A00152	6.5
	CC01A00192	7.6
	CC01A001B2	—

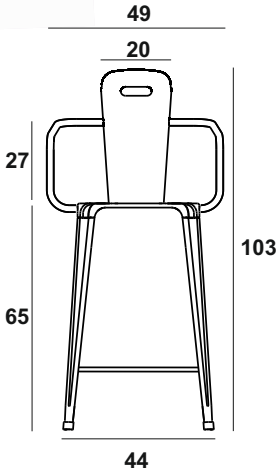

PARAX
ideas for contemporary life

Bar Stool 45cm

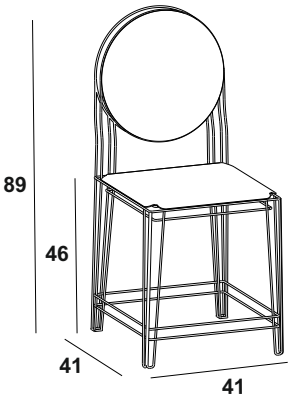

PRO CODE

BI01A00151

WEIGHT (kg)

4.5

PARAX
ideas for contemporary life

Sofa (Steel & Punch)

TYPE	PRO CODE	L (cm)
تک نفره	BK01A00104	56
دو نفره	BK01A00114	100
سه نفره	BK01A00124	150

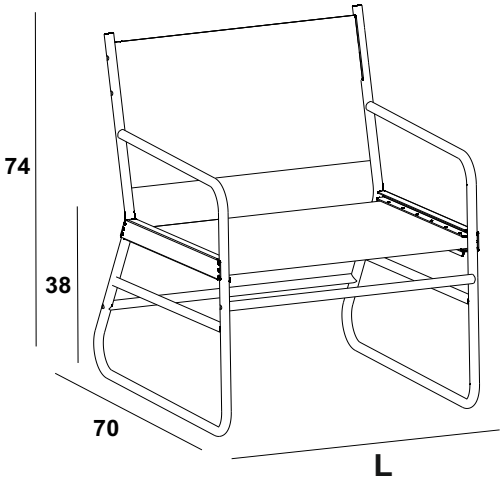

PARAX
ideas for contemporary life

PARAX
ideas for contemporary life

Sofa (Aluminum)

TYPE	PRO CODE	L (cm)
تک نفره	BK01A00200	56
دو نفره	BK01A00210	100
سه نفره	BK01A00220	150

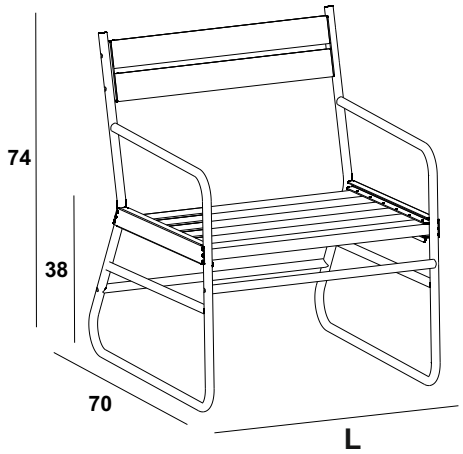

PARAX
ideas for contemporary life

Sofa (Simple thermowood)

TYPE	PRO CODE	L (cm)
	BK01A00600	56
	BK01A00610	100
	BK01A00620	150

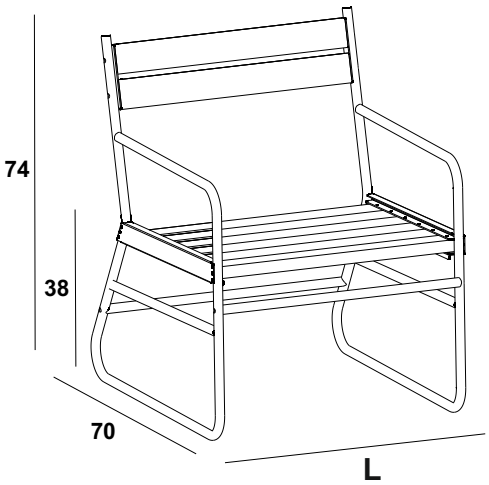

PARAX
ideas for contemporary life

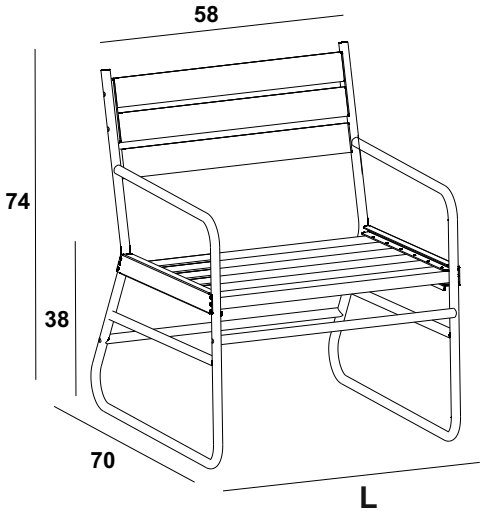

Sofa (CNC thermowood)

cnc

TYPE	PRO CODE	L (cm)
تک نفره	BK01A00601	56
دو نفره	BK01A00611	100
سه نفره	BK01A00621	150

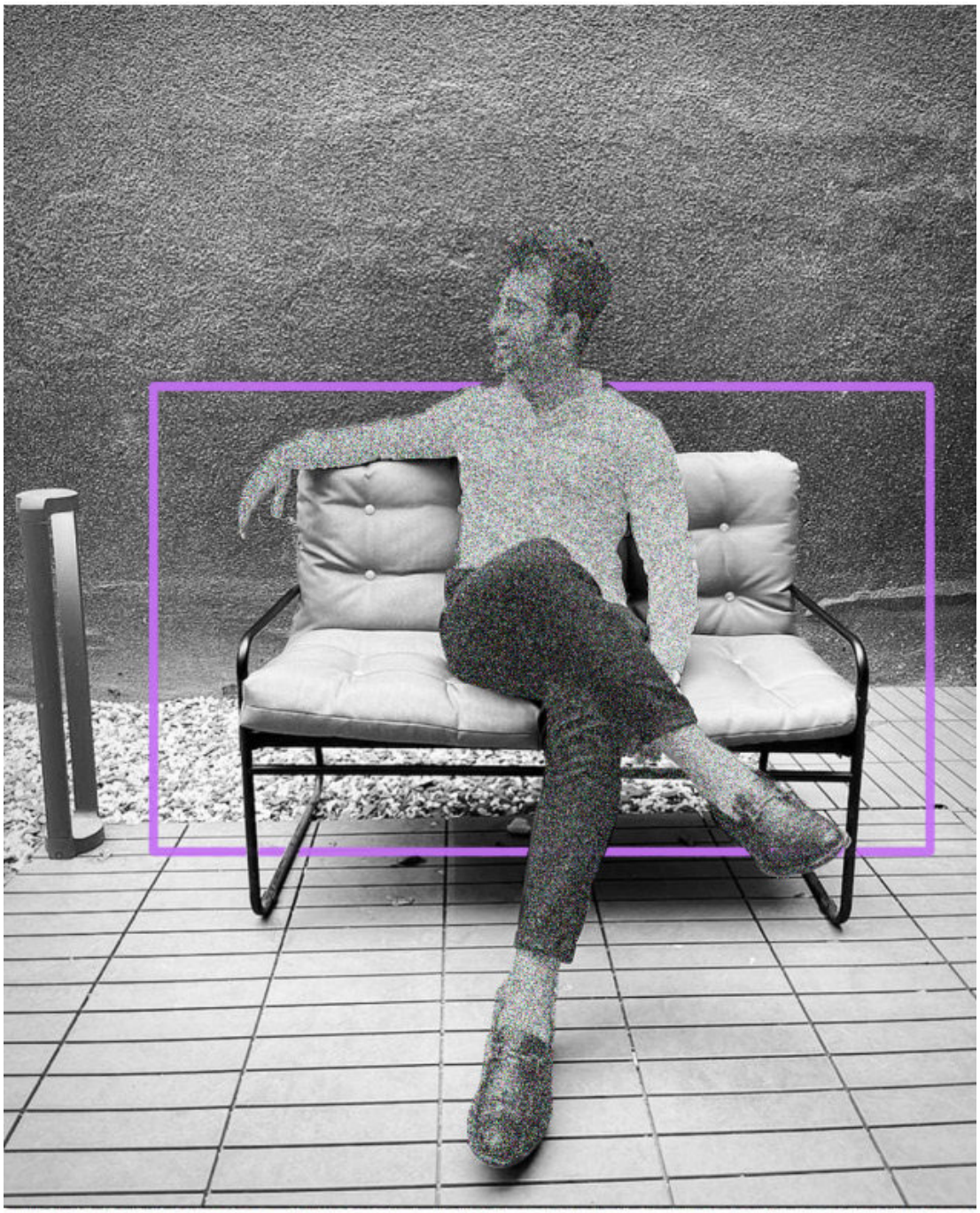

PARAX
ideas for contemporary life

Bench

L(cm)	TYPE	PRO CODE	WEIGHT (kg)
100		AH01A00101	12.9
		AH01A00191	12.4
		AH01A00131	12
		AH01A00601	8.5
		AH01A00151	10.8
150		AH01A00111	18.2
		AH01A001A1	17.5
		AH01A00141	16.8
		AH01A00611	11.6
		AH01A00171	14.3

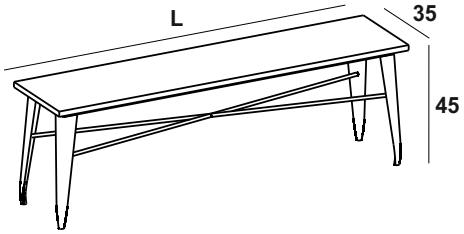

PARAX
ideas for contemporary life

PARAX
ideas for contemporary life

Throne

TYPE	PRO CODE	WEIGHT (kg)	L (cm)
	AV01A00111	–	90
	AV01A00141	–	45

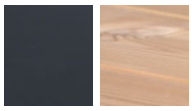

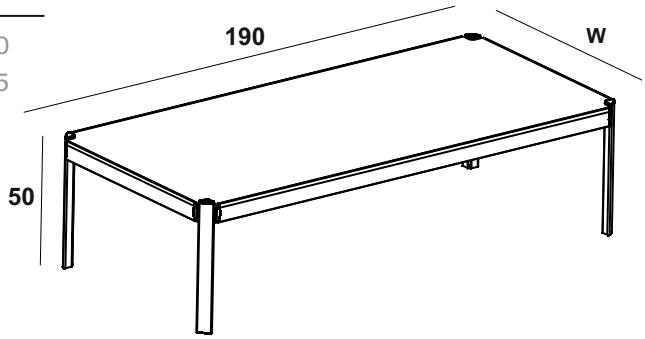

PARAX
ideas for contemporary life

PARAX
ideas for contemporary life

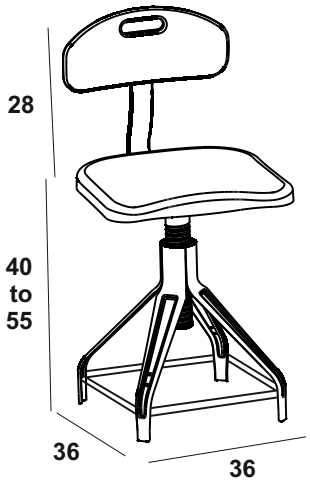

Full Adjustable - صندلی تمام تنظیم

PRO CODE	WEIGHT (kg)
AK01A00970	5.8
AK01A00670	6.8

PARAX
ideas for contemporary life

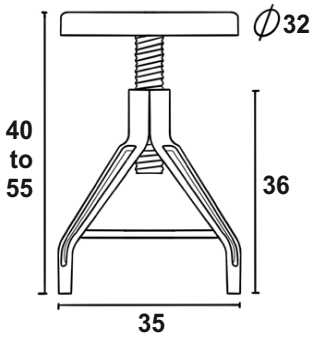

Karyar (Short)

PRO CODE	WEIGHT (kg)
AK01A00100	5.2

PARAX
ideas for contemporary life

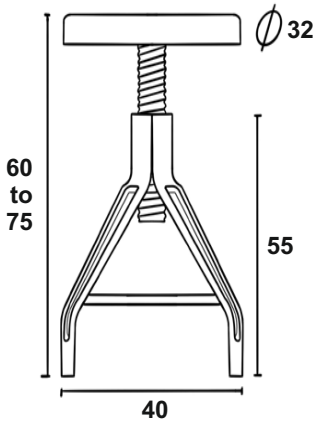

Karyar (Long)

PRO CODE	WEIGHT (kg)
AK01A00102	6.4

PARAX
ideas for contemporary life

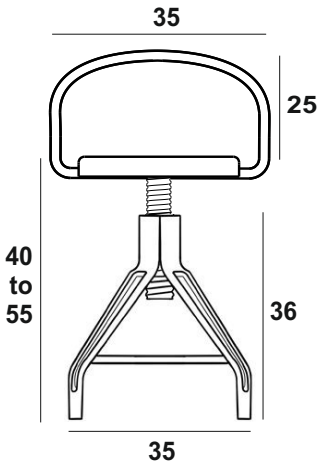

Karyar (with Backrest)

TYPE	PRO CODE	WEIGHT (kg)
کوتاه	AK01A00110	5.8
بلند	AK01A00112	7

PARAX
ideas for contemporary life

Karyar (with Big Seat)

PRO CODE	WEIGHT (kg)
AK01A00151	5.4
AK01A00161	6.6
AK01A00152	6
AK01A00162	7.2

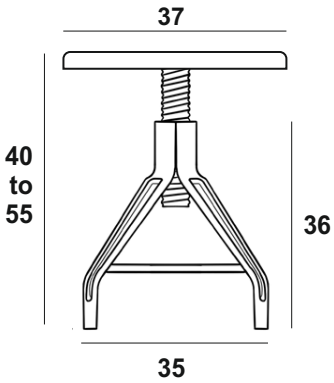

PARAX
ideas for contemporary life

Thermo cnc (Navid)

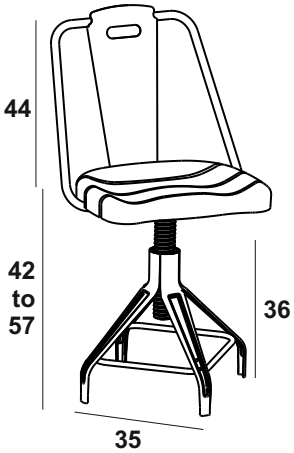

PRO CODE

AK01A00621

WEIGHT (kg)

9.2

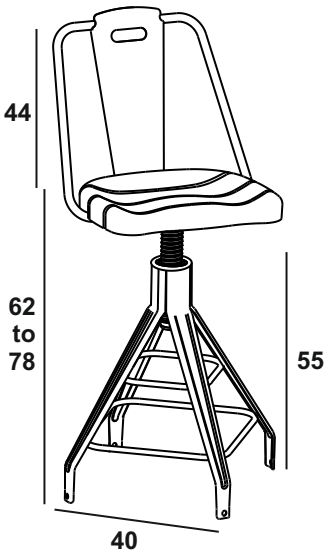

PRO CODE

AK01A00622

WEIGHT (kg)

10.4

PARAX
ideas for contemporary life

Thermo cnc (Tiam)

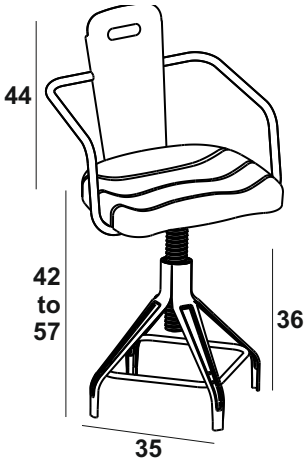

PRO CODE

AK01A00641

WEIGHT (kg)

9.4

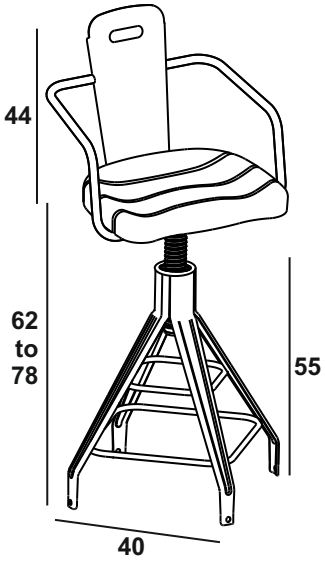

PRO CODE

AK01A00642

WEIGHT (kg)

10.6

PARAX
ideas for contemporary life

Thermo cnc (Simple)

PRO CODE

AK01A00631

WEIGHT (kg)

7.6

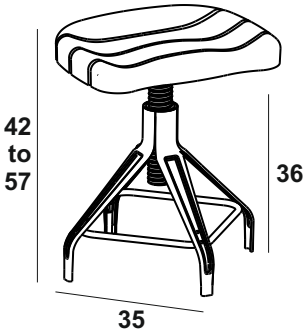

PRO CODE

AK01A00632

WEIGHT (kg)

8.8

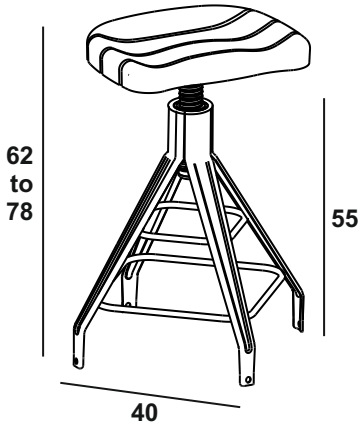

PARAX
ideas for contemporary life

PARAX
ideas for contemporary life

Stool (Simple)

PRO CODE	WEIGHT (kg)	W (cm)	H (cm)
AC01A00113	3.9	34	35
AC01A00114	4.1	36	40
AC01A00115	4.3	38	50
AC01A00116	4.5	41	60
AC01A00117	5	44	70
AC01A00118	5.2	47	80
AC01A00119	5.8	50	90

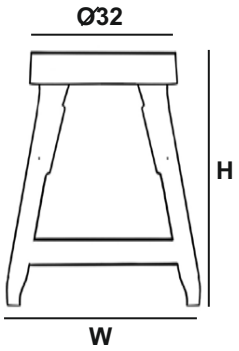

PARAX
ideas for contemporary life

Stool (with backrest)

PRO CODE	WEIGHT (kg)	W (cm)	H (cm)
AC01A00125	5	38	50
AC01A00126	5.2	41	60
AC01A00127	5.7	44	70
AC01A00128	5.9	47	80
AC01A00129	6.4	50	90

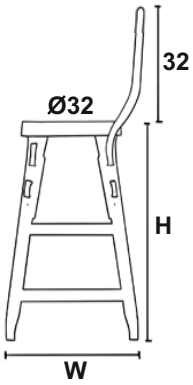

PARAX
ideas for contemporary life

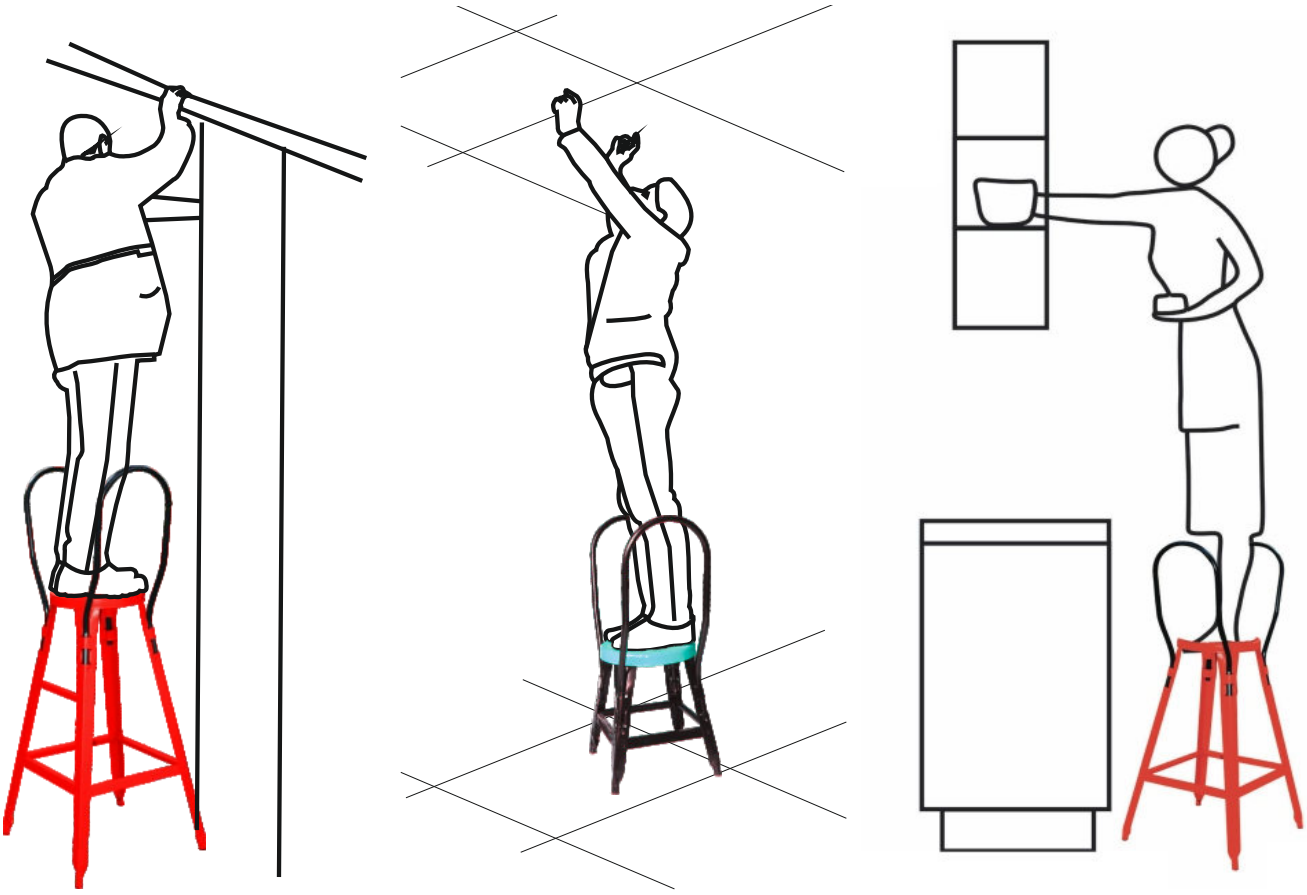

PARAX
ideas for contemporary life

Stool (with 2 Handle)

PRO CODE	WEIGHT (kg)	W (cm)	H (cm)
AC01A00135	5.6	38	50
AC01A00136	5.8	41	60
AC01A00137	6.3	44	70
AC01A00138	6.6	47	80
AC01A00139	7.1	50	90

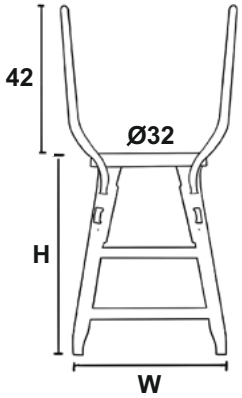

PARAX

ideas for contemporary life

Assembled Stool

PRO CODE	WEIGHT (kg)
AC01A00056	6

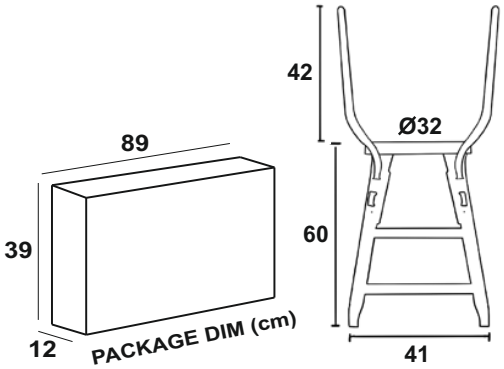

PARAX
ideas for contemporary life

Special Versions

PARAX
ideas for contemporary life

Pelikan

PRO CODE	WEIGHT (kg)	W (cm)	H (cm)
AP01A00105	3	35	50
AP01A00106	3.1	36	60
AP01A00107	3.3	37	70

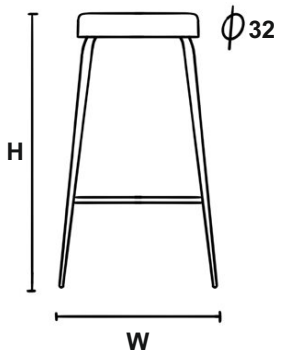

PARAX
ideas for contemporary life

Pelikan (with Big Seat)

PRO CODE	WEIGHT (kg)	W (cm)	H (cm)
AP01A00135	3.2	35	50
AP01A00136	3.3	36	60
AP01A00137	3.5	37	70

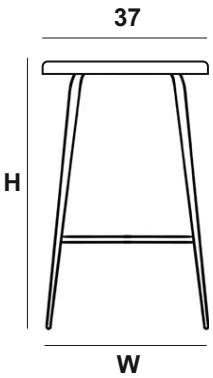

PARAX
ideas for contemporary life

Assembled Pelikan

PRO CODE	WEIGHT (kg)	W (cm)	H (cm)
AP01A00115	3	35	50
AP01A00116	3.1	36	60

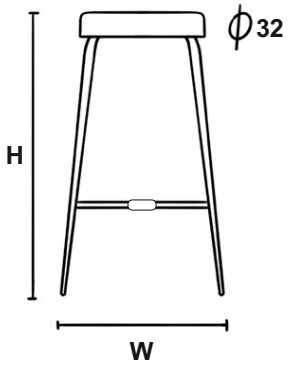

PARAX
ideas for contemporary life

Bicolor Pelikan

PRO CODE	WEIGHT (kg)	W (cm)	H (cm)
AP01A00125	3.1	35	50
AP01A00126	3.2	36	60
AP01A00127	3.4	37	70

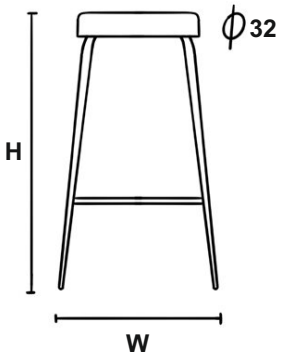

Wooden Pelikan ·

PRO CODE	WEIGHT (kg)	W (cm)	H (cm)
AP01A00605	4.6	35	55
AP01A00606	4.7	36	65
AP01A00607	4.9	37	75

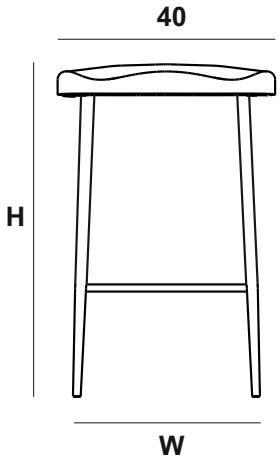

Square Thermowood Seat

PRO CODE	WEIGHT (kg)
AN01A00620	1

2

35 x 35

PARAX
ideas for contemporary life

Round Wood Seat

PRO CODE	WEIGHT (kg)
AN01A00610	1.5

Tables

PARAX
ideas for contemporary life

Parax Table (Structure)

L x W (cm)	PRO CODE
60 x 60 x2	AG01A001A1
80 x 80 x4	AG01A001B1
60 x 120 x6	AG01A001C1
80 x 120 x6	AG01A001D1
80 x 160 x8	AG01A001E1

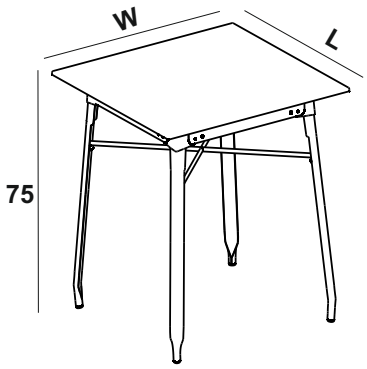

PARAX
ideas for contemporary life

Parax Table (Steel)

L x W (cm)	PRO CODE
60 x 60 x2	AG01A00121
80 x 80 x4	AG01A00131
60 x 120 x6	AG01A00141
80 x 120 x6	AG01A00151
80 x 160 x8	AG01A00181

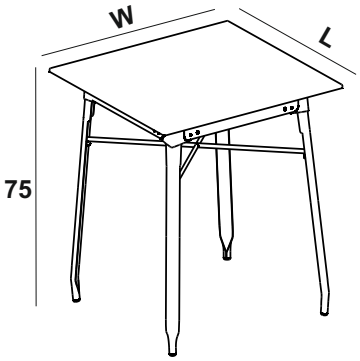

PARAX
ideas for contemporary life

Parax Table (Punch)

L x W (cm)	PRO CODE
60 x 60 x2	AQ01A00121
80 x 80 x4	AQ01A00131
60 x 120 x6	AQ01A00141
80 x 120 x6	AQ01A00151
80 x 160 x8	AQ01A00181

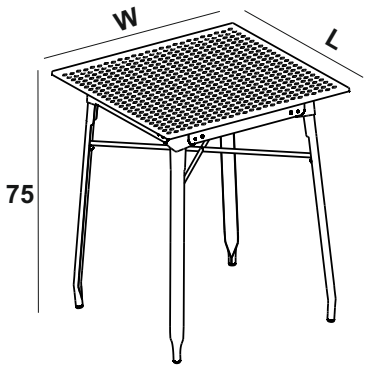

PARAX
ideas for contemporary life

Parax Table (Thermowood)

L x W (cm)	PRO CODE
60 x 60 x2	AG01A00621
80 x 80 x4	AG01A00631
60 x 120 x6	AG01A00641
80 x 120 x6	AG01A00651
80 x 160 x8	AG01A00681

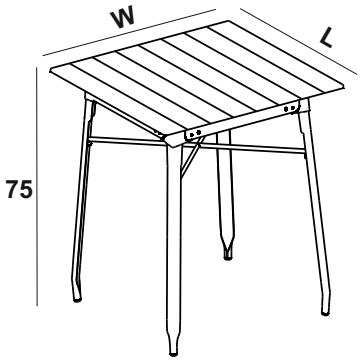

PARAX
ideas for contemporary life

Parax Table (Porcelain)

L x W (cm)			
60 x 60	x2	95 x 95	x4
80 x 80	x4	120 x 120	x8
60 x 120	x6	80 x 160	x8
80 x 120	x6		

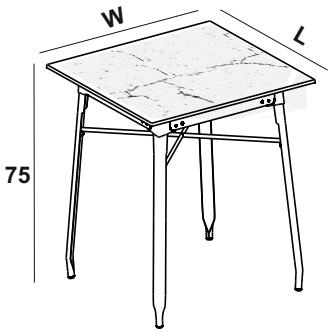

PARAX
ideas for contemporary life

PARAX
ideas for contemporary life

Bar Table

H (cm) = 90 - 100 - 110

L (cm) = 100 x2 - 150 x3

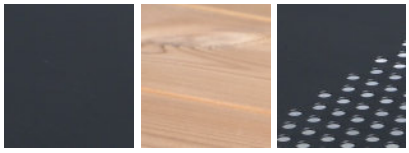

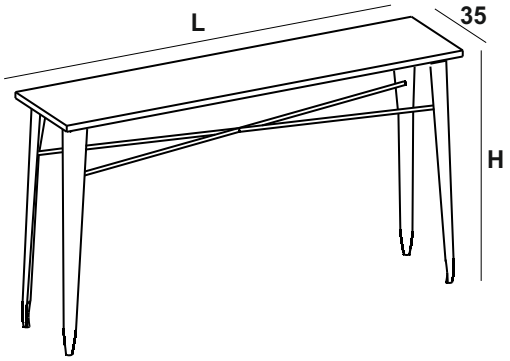

PARAX
ideas for contemporary life

PARAX
ideas for contemporary life

Folding Table (steel)

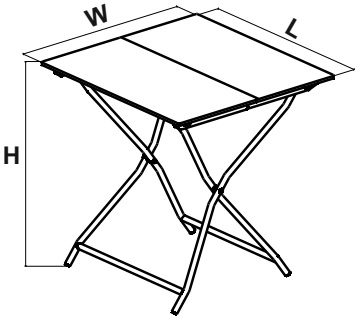

PRO CODE	W x L (cm)	H (cm)	WEIGHT (kg)
AR01A00142	x2 54 x 54	70	9.5
AR01A00161	x4 70 x 70	75	12.2
AR01A00131	x4 80 x 80	75	14

PARAX
ideas for contemporary life

Folding Table (Thermowood)

PRO CODE	W x L (cm)	H (cm)	WEIGHT (kg)
AR01A00642	x2 54 x 54	70	7
AR01A00661	x4 70 x 70	75	8.5

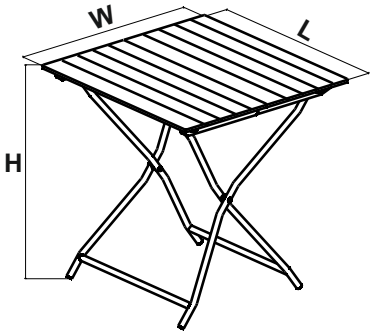

PARAX
ideas for contemporary life

Folding Table (Punch)

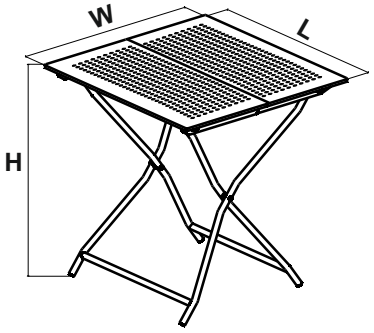

PRO CODE	W x L (cm)	H (cm)	WEIGHT (kg)
AR01A00152	x2 54 x 54	70	8.3
AR01A00171	x4 70 x 70	75	10.5

PARAX
ideas for contemporary life

PARAX
ideas for contemporary life

PARAX
ideas for contemporary life

Nature Table (Thick Thermowood)

L x W (cm)	PRO CODE
90 x 170 x6	AG01A006K1

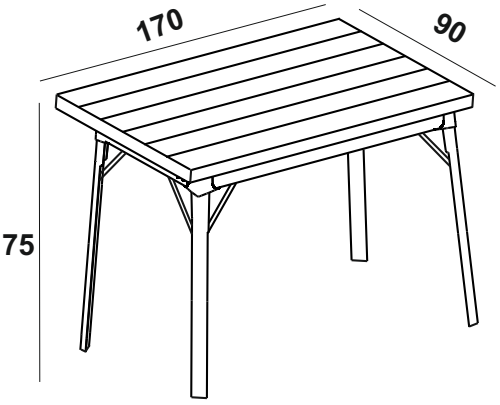

PARAX
ideas for contemporary life

PARAX
ideas for contemporary life

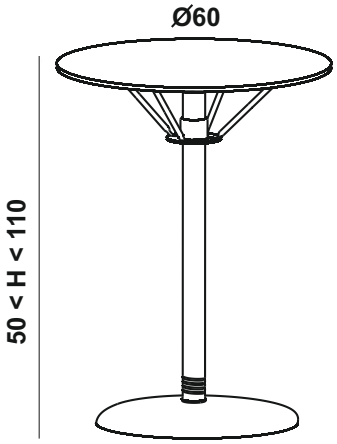

Single Leg Round Table (Steel)

PRO CODE	WEIGHT (kg)
AG01A00101	15

PARAX
ideas for contemporary life

Single Leg Hexagonal Table (Steel)

PRO CODE	WEIGHT (kg)
AM01A001M1	17

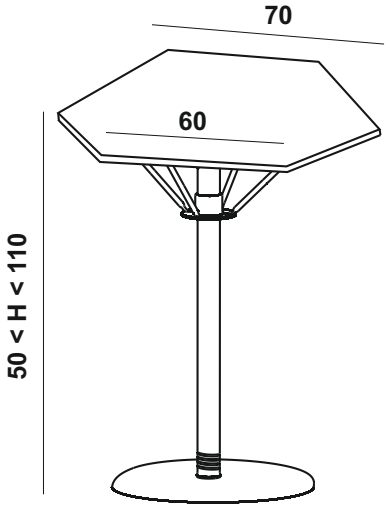

PARAX
ideas for contemporary life

Single Leg Table (Thermowood)

PRO CODE	WEIGHT (kg)	WxW (cm)
AM01A00621	14.3	60 x 60
AM01A006G1	16.3	70 x 70
AM01A00631	17.4	80 x 80

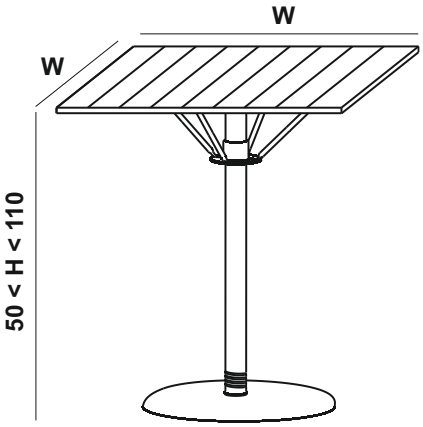

PARAX
ideas for contemporary life

Single Leg Table (Steel)

PRO CODE	WEIGHT (kg)	W×W (cm)
AM01A00121	16	x2 60 x 60
AM01A001G1	18.5	x4 70 x 70
AM01A00131	20.3	x4 80 x 80

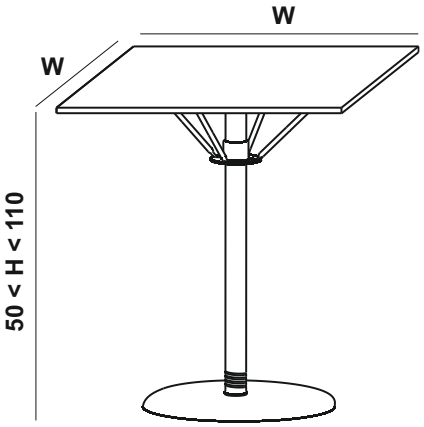

PARAX
ideas for contemporary life

Double Leg Table

TYPE	PRO CODE	WEIGHT (kg)	L (cm)
	BA01A00141	34.8	120
	BA01A00181	36.7	140
	BA01A00151	38.6	160
	BA01A00191	31.4	120
	BA01A001A1	32.7	140
	BA01A001B1	34	160
	BA01A00641	30.4	120
	BA01A00681	31.5	140
	BA01A00651	32.7	160

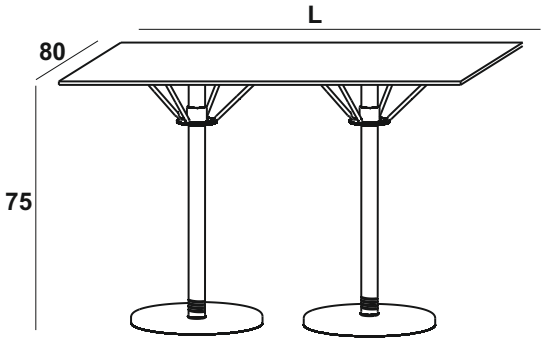

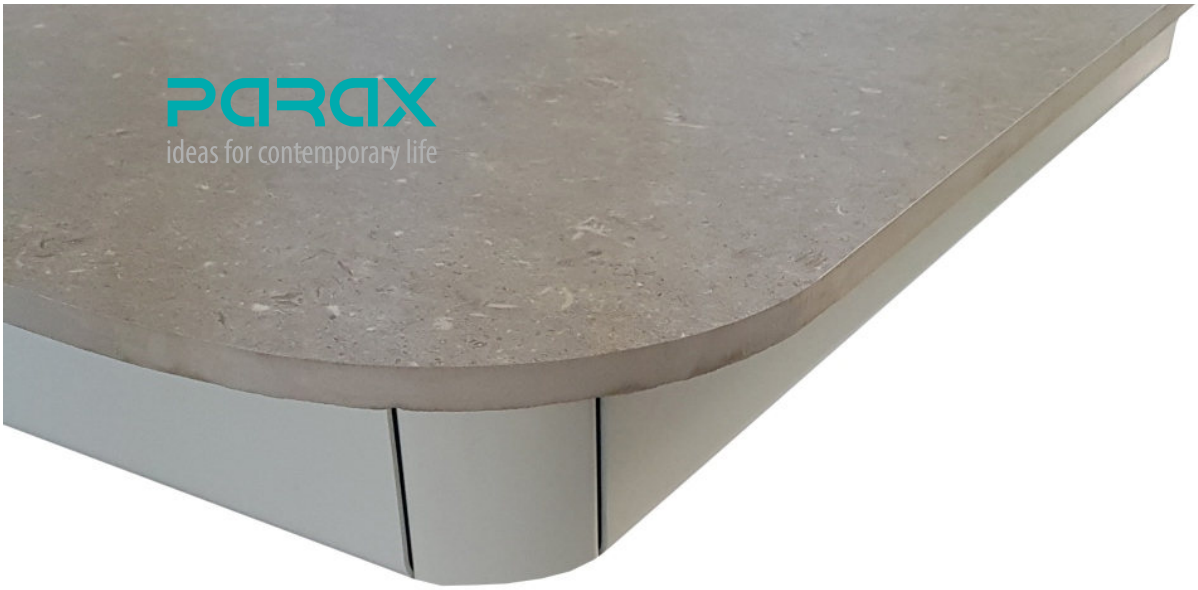

Luxury Table (Stone)

L x W (cm)	PRO CODE
90 x 170	x6

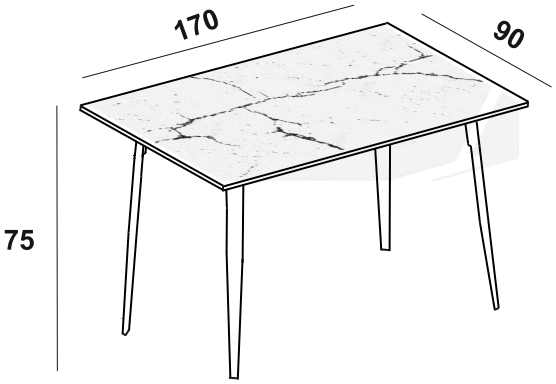

Luxury Table (Stone)

L x W (cm)	PRO CODE
90 x 170	x6

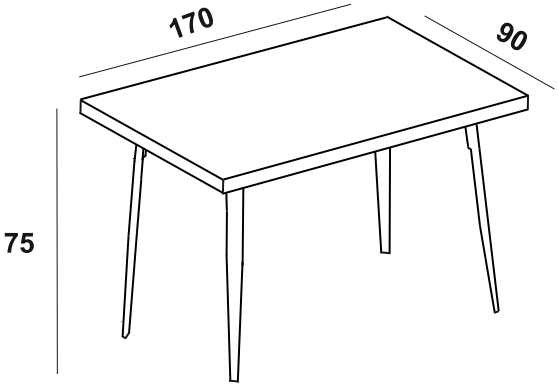

PARAX
ideas for contemporary life

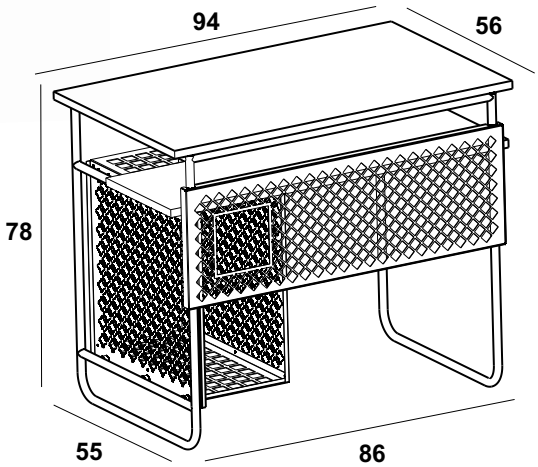

Computer Table

PRO CODE

BU01A00600

PARAX
ideas for contemporary life

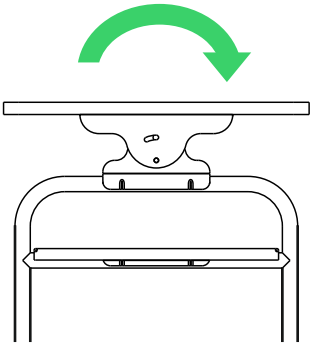

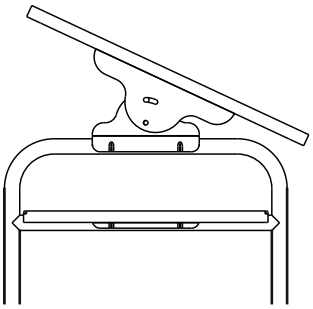

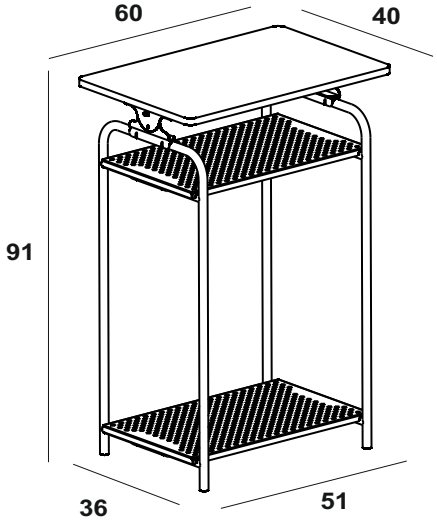

PRO CODE	WEIGHT (kg)
AG01A001L3	12

PARAX
ideas for contemporary life

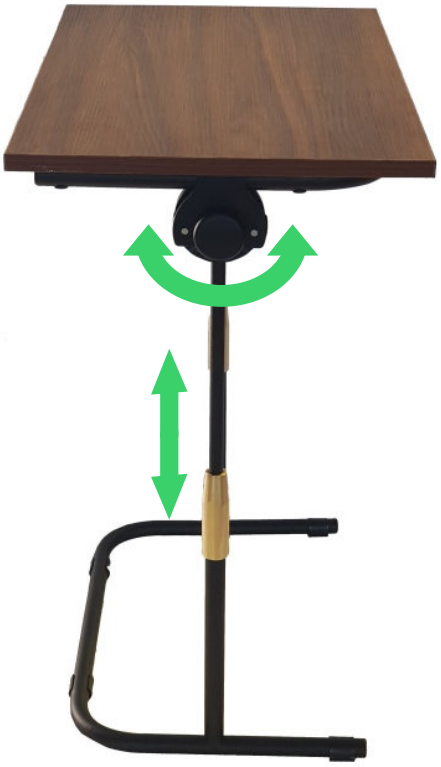

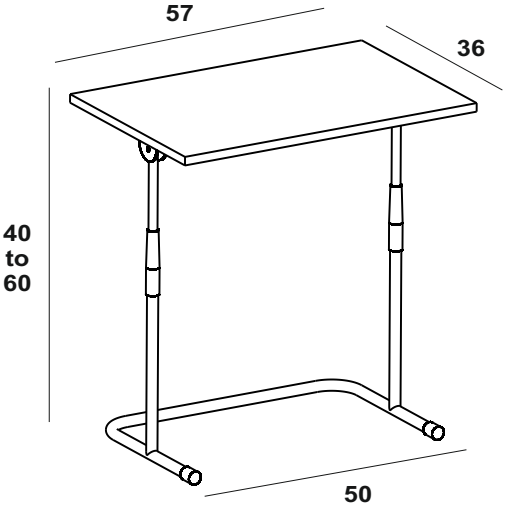

Laptop Table

PRO CODE	WEIGHT (kg)
BX01A00110	5

PARAX
ideas for contemporary life

Trolley

PRO CODE	L (cm)	W (cm)	H (cm)
BP01A00100 BP01A00110 BP01A00120	70	46	85
BP01A00101 BP01A00111 BP01A00121	60	40	80

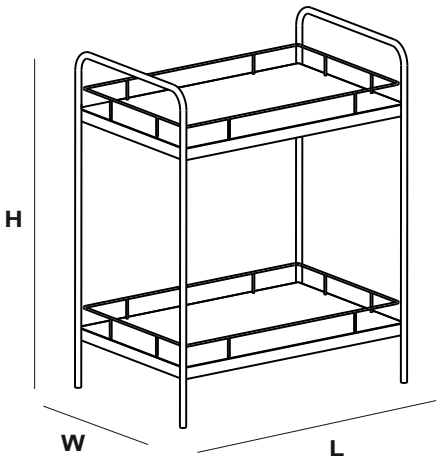

PARAX
ideas for contemporary life

Arc

PRO CODE	WEIGHT (kg)
BI01A00166	7.3

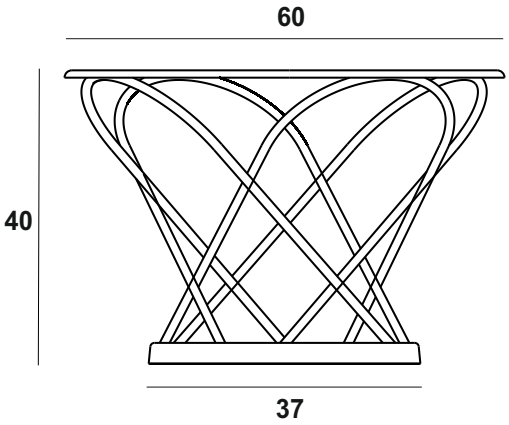

PARAX
ideas for contemporary life

Accessories Table

TYPE	PRO CODE	WEIGHT (kg)
ساده	BM01A00100	3.2
دسته‌دار	BM01A00101	3.4

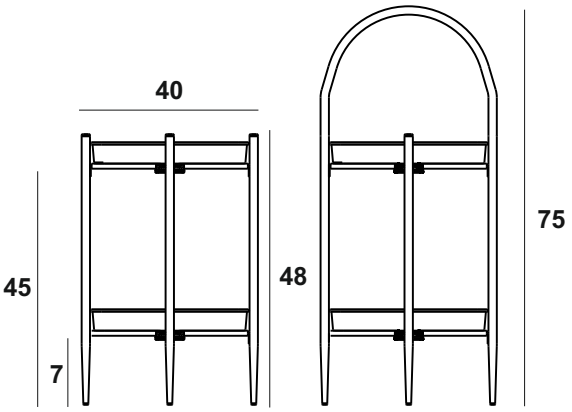

PARAX
ideas for contemporary life

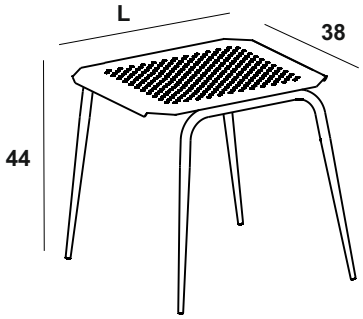

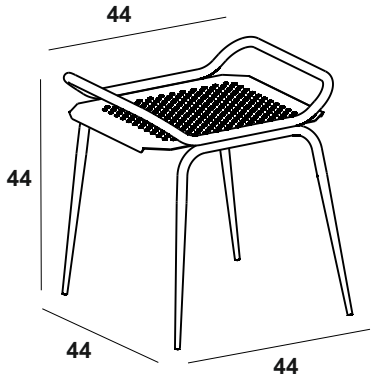

Zomorrod

PRO CODE	L (cm)
BM01A00142	38
BM01A00152	76
BM01A00132	

PARAX
ideas for contemporary life

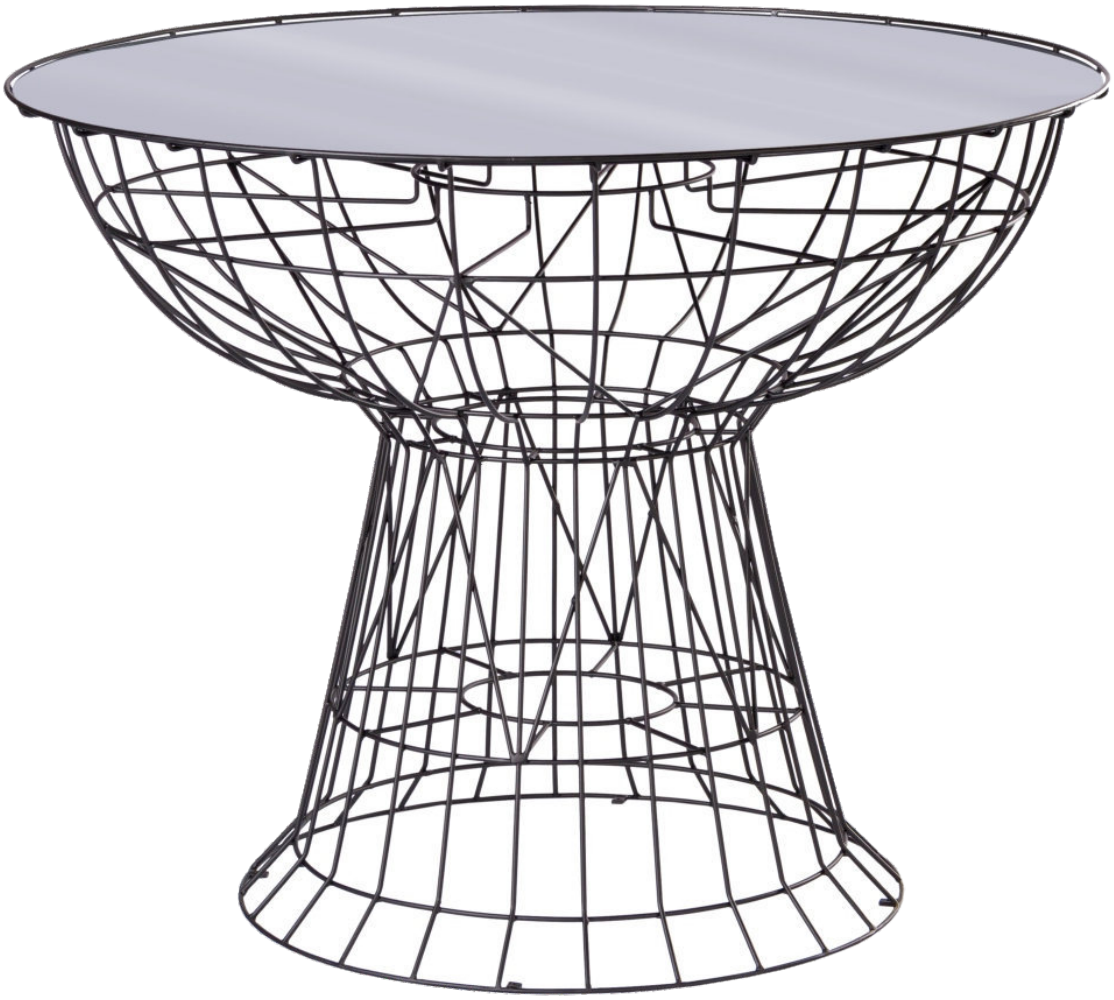

Bar Table

PRO CODE	WEIGHT (kg)	D (cm)	H (cm)
AY01A00975	3.8	90	45
AY01A00974	4.7	90	75
AY01A00964	5.2	100	75

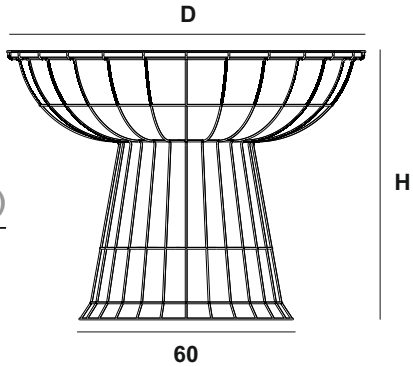

PARAX
ideas for contemporary life

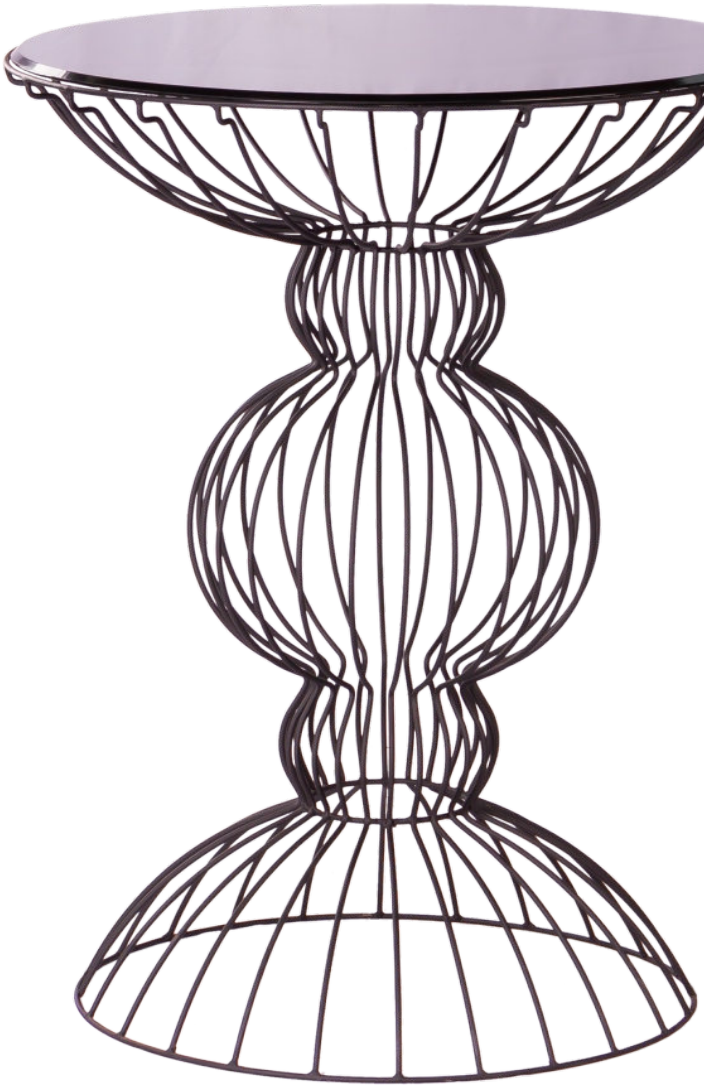

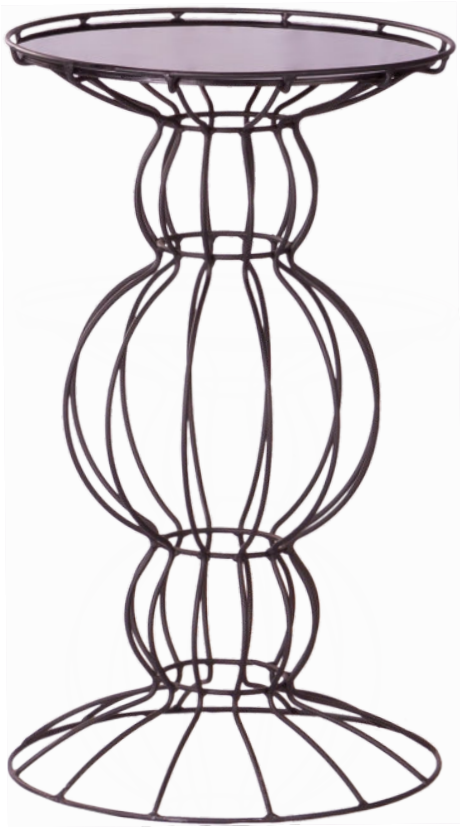

Spherical Table

PRO CODE	WEIGHT (kg)	H (cm)
BI01A00123	3	60
BI01A00134	4	77

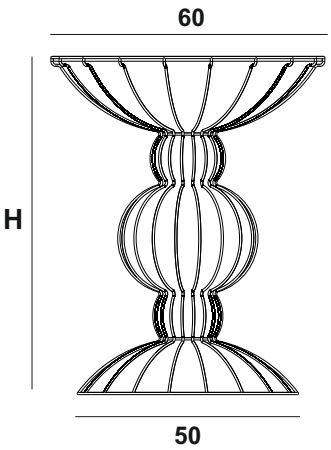

PARAX
ideas for contemporary life

Conical Leg Table

PRO CODE

BI01A00144

WEIGHT (kg)

7.2

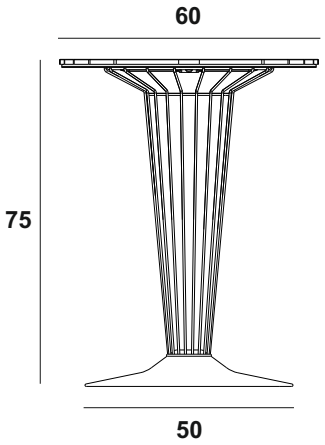

PARAX
ideas for contemporary life

Barrel Table

PRO CODE	WEIGHT (kg)	H (cm)
BI01A00114	3.8	75
BI01A00115	4.7	110

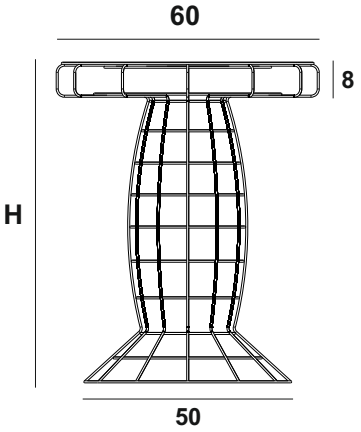

PARAX
ideas for contemporary life

Barrel Stool

PRO CODE	WEIGHT (kg)	H (cm)
BI01A00100	3.4	47

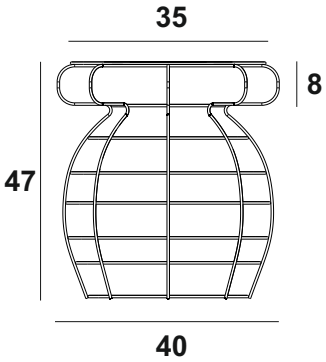

Shelves

PARAX
ideas for contemporary life

Regal

PRO CODE	WEIGHT (kg)	H (cm)
AN01A00132	8.5	160
AN01A00131	7.2	120

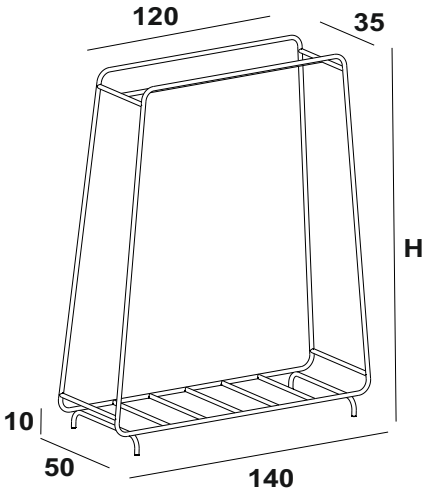

PARAX
ideas for contemporary life

Stand - استند

PRO CODE	WEIGHT (kg)	H (cm)
BF01A00110	26	
BF01A00111	18	126
BF01A00612		
BF01A00120	32.6	
BF01A00121	22.6	166
BF01A00622		

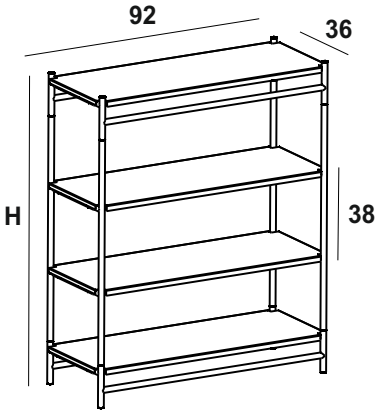

PARAX
ideas for contemporary life

Lights

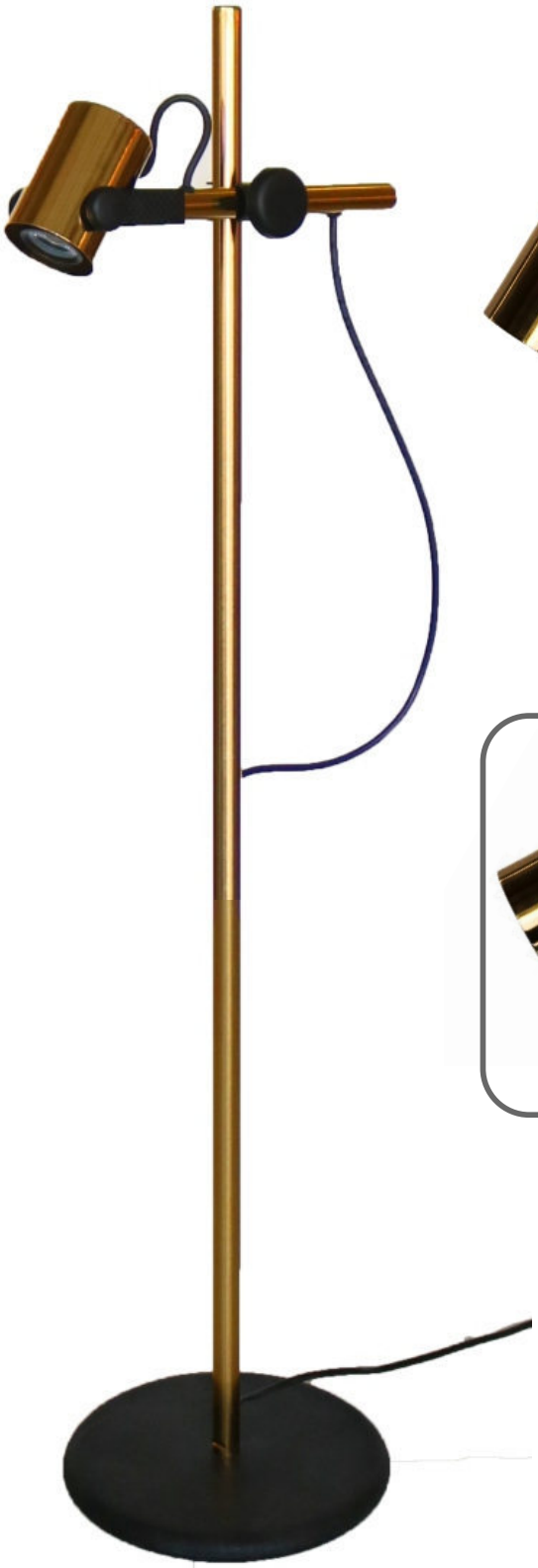

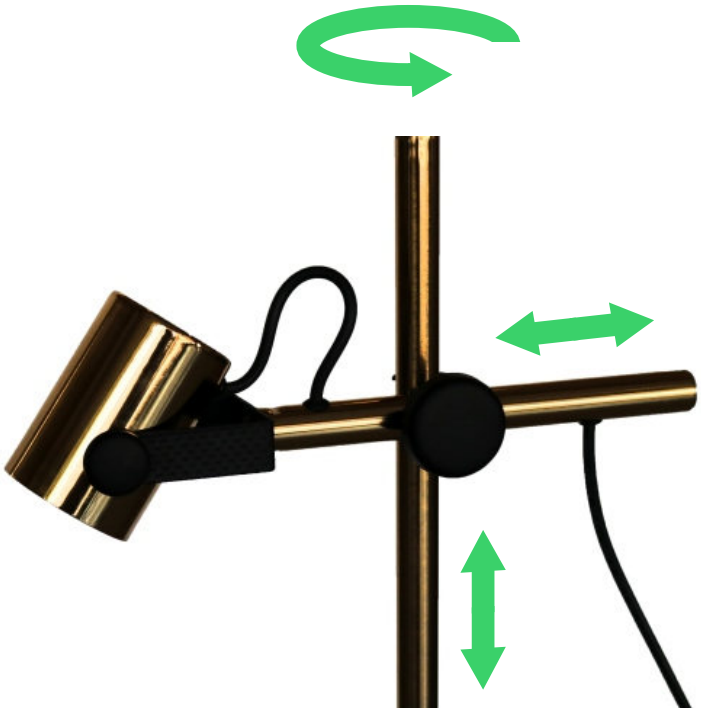

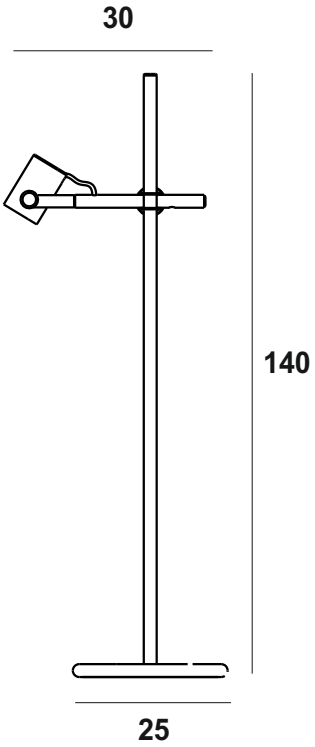

Stand lamp

PRO CODE	WEIGHT (kg)
BG01A001A3	3.5

PARAX

ideas for contemporary life

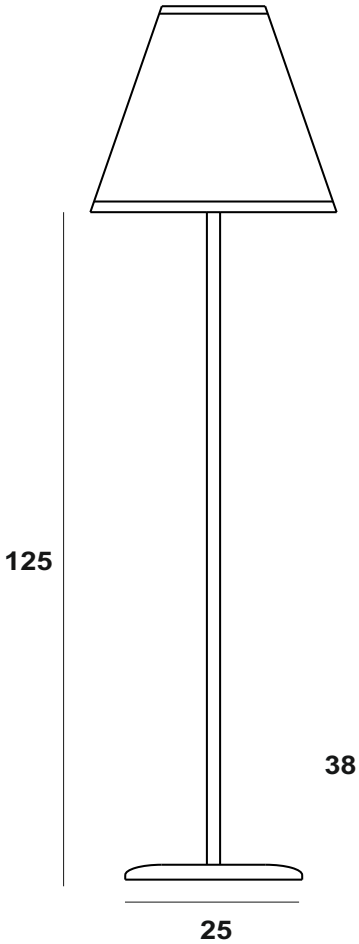
125
25

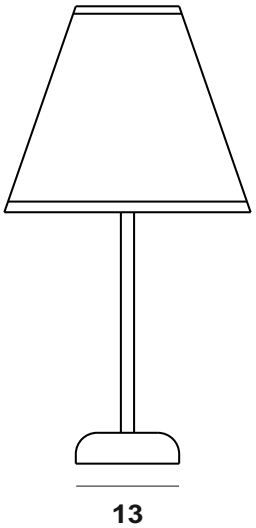
38
13

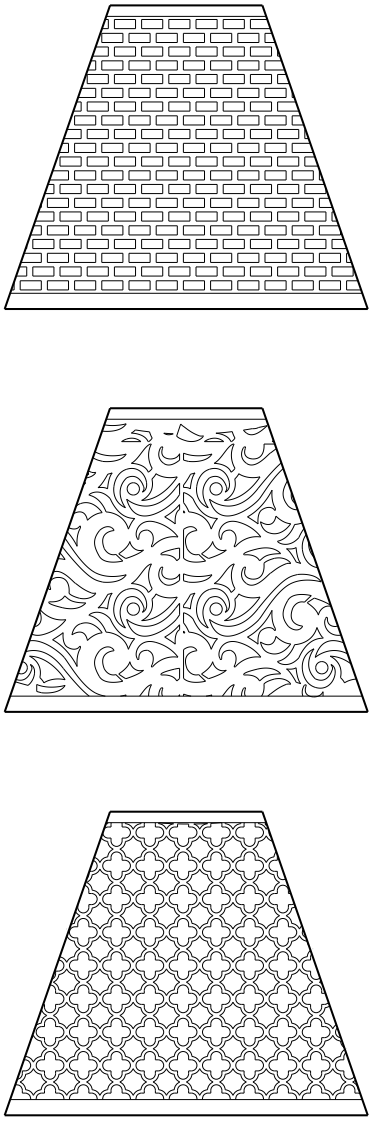

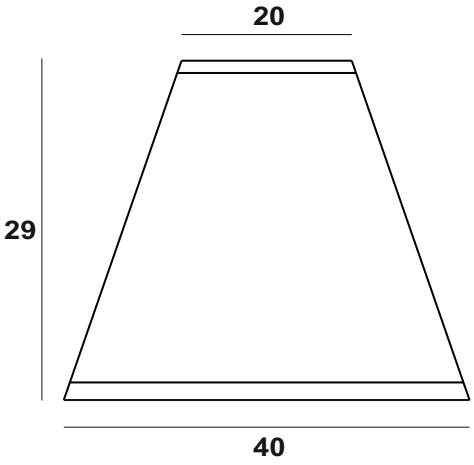
20
29
40

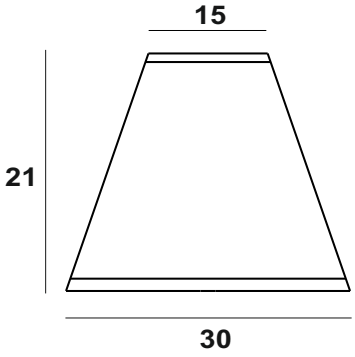
15
21
30

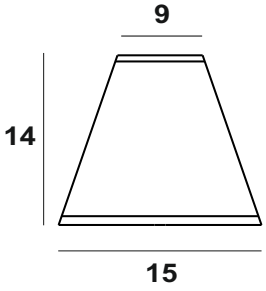
9
14
15

PARAX
ideas for contemporary life

Bar Luster

Pamchal

PRO CODE

AS01A00131

WEIGHT (kg)

1.1

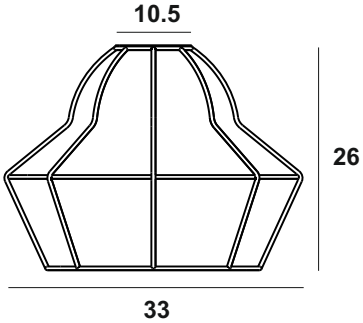

Sheipoori

PRO CODE

AS01A00141

WEIGHT (kg)

0.4

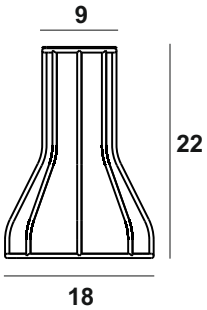

Accessories

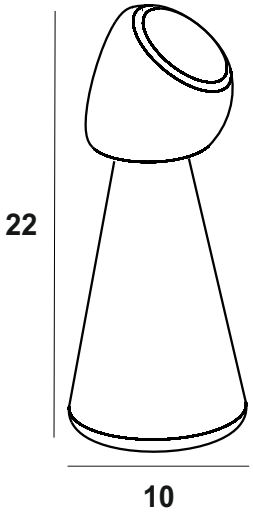

Flower pot

PRO CODE	WEIGHT (kg)
BA01A00990	0.5

Round Trays

TYPE	PRO CODE	WEIGHT (kg)
ساده	GS01A00102	0.8
دسته دار	GS01A00101	0.8

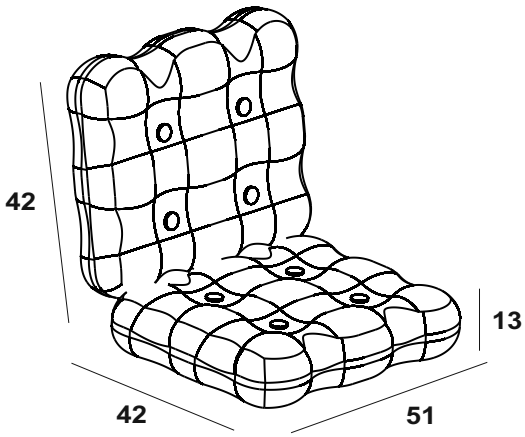

Sofa Coshion (water proof **)**

PRO CODE	WEIGHT (kg)
AT01A00986	4

PARAX
ideas for contemporary life

BB2

BBQ (Economic Model)

PRO CODE	WEIGHT (kg)
AB01A00110	7.3

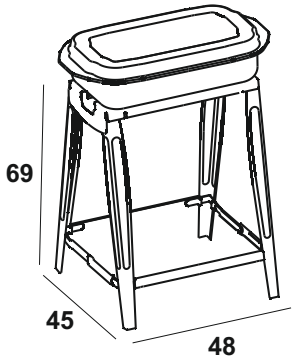

BBQ (Export Model)

PRO CODE	WEIGHT (kg)
AB01A00100	8.9

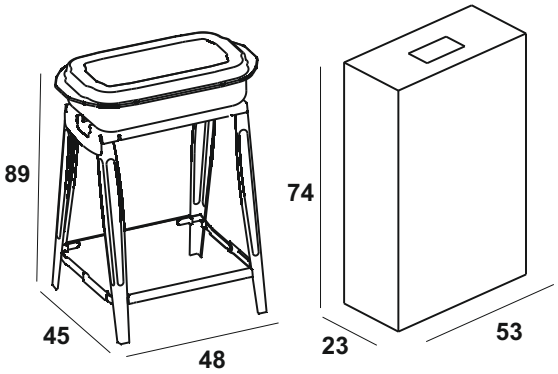

PARAX

ideas for contemporary life

Fire Pit (version:M4)

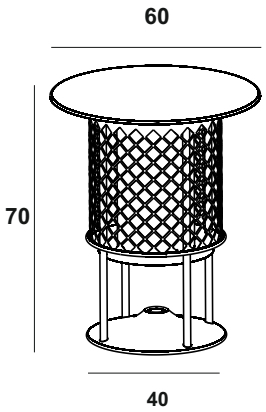

Heater

PRO CODE

BQ01A00133

Stairs

PARAX

ideas for contemporary life

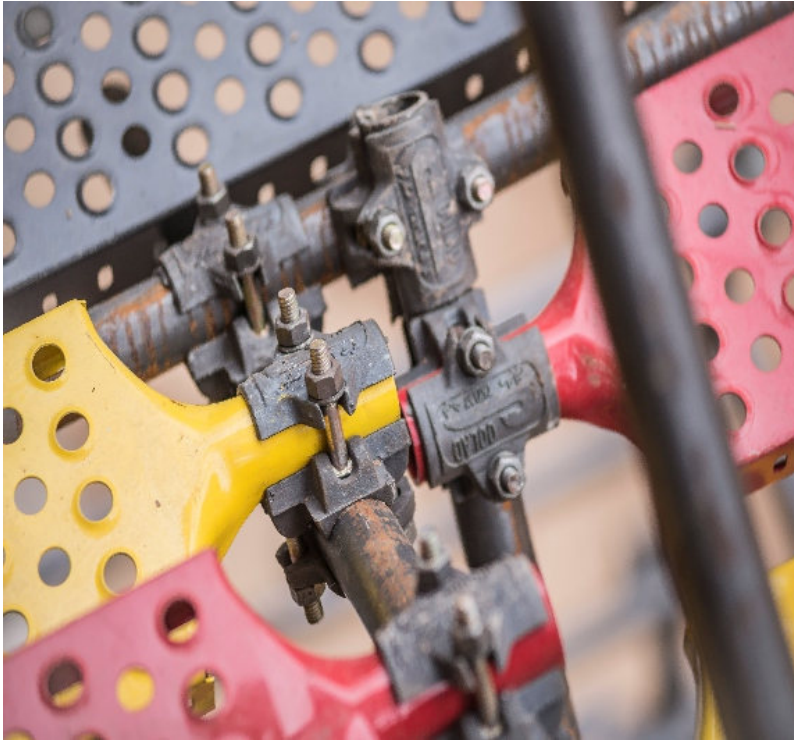

PARAX
ideas for contemporary life

ISO9001:2015
Certificate Number:
105869/A/0006/UK/En

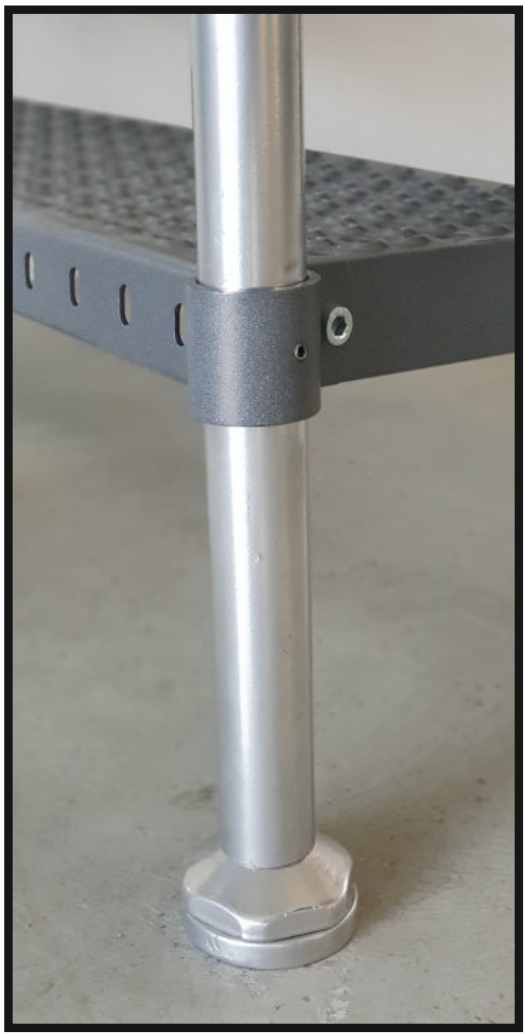

PARAX
ideas for contemporary life

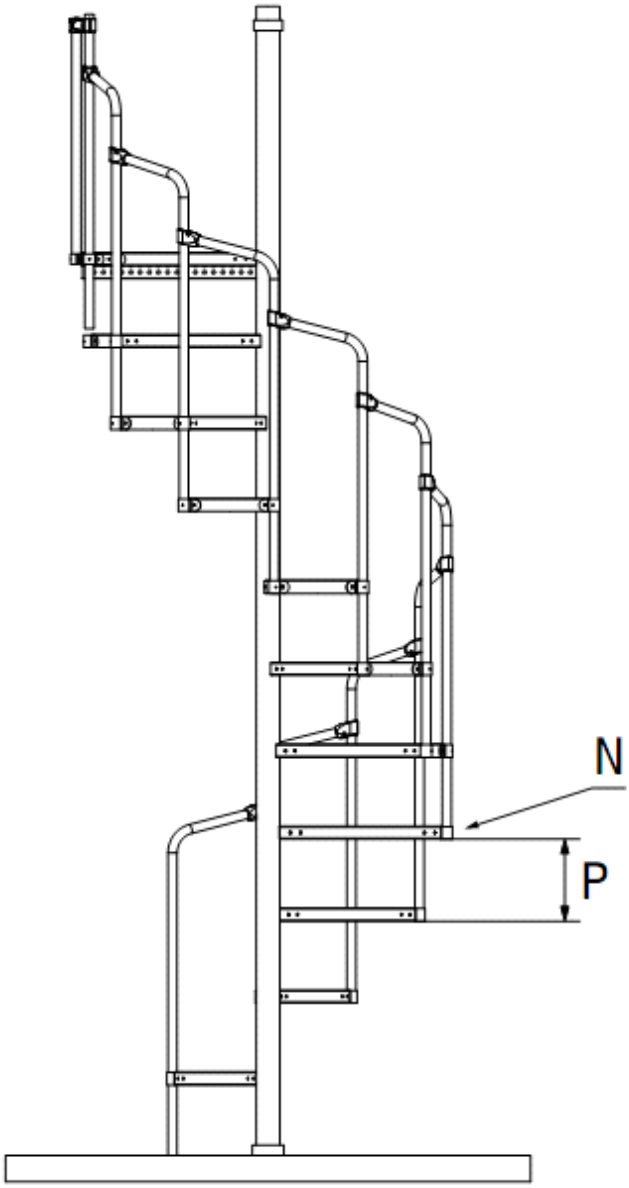

Spiral Stairs -

100 < D < 300 4 < H < 6 d = 9

م 18 < P < 24 AA01A00110

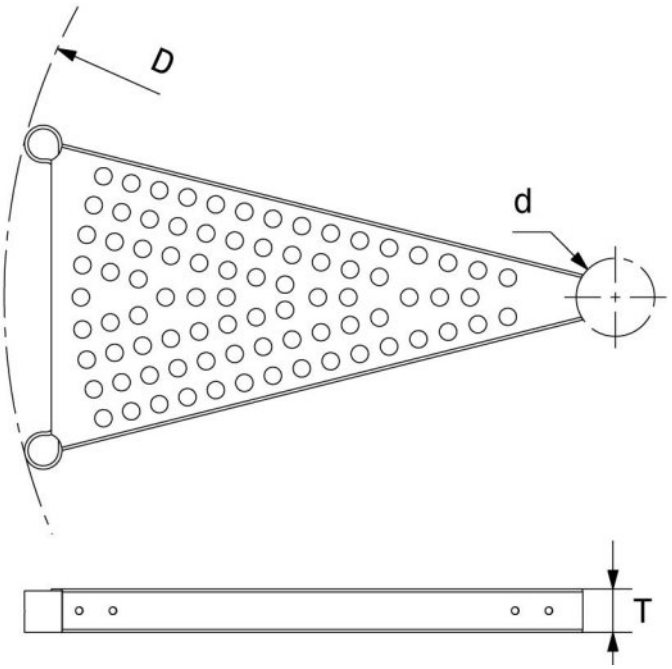

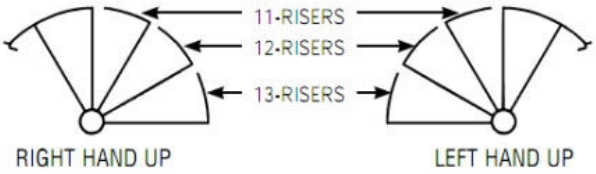

PARAX

ideas for contemporary life

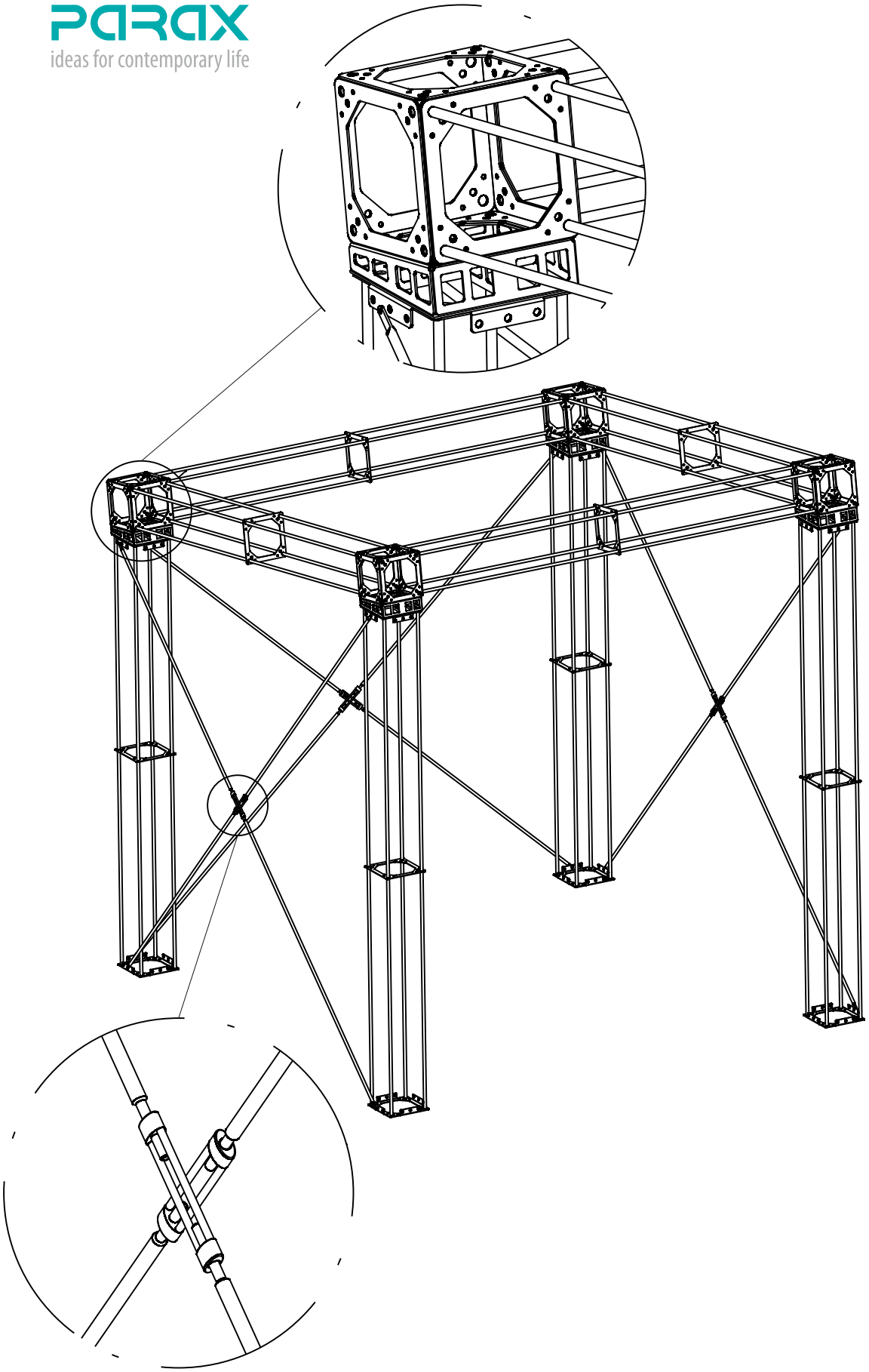

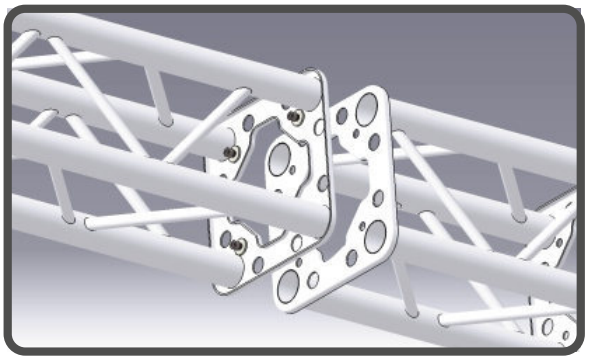

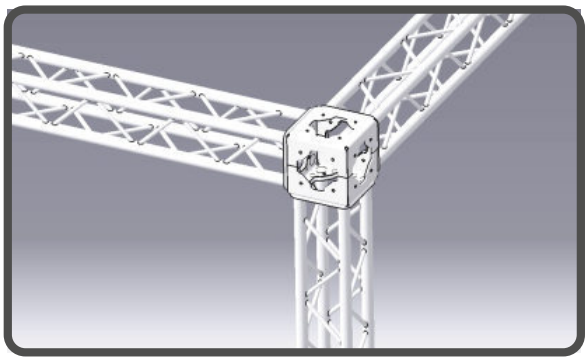

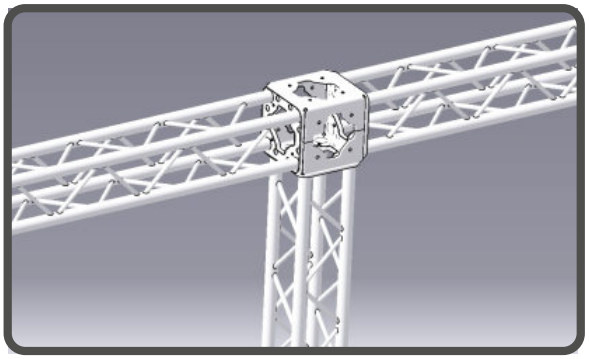

Aluminum Space Frames

L (cm)	PRO CODE	WEIGHT (kg)
50	AI01A00201	4.1
100	AI01A00202	5.2
200	AI01A00203	7.5
250	AI01A00204	8.7
300	AI01A00205	9.8
350	AI01A00206	11
400	AI01A00207	12.1
500	AI01A00208	13.4

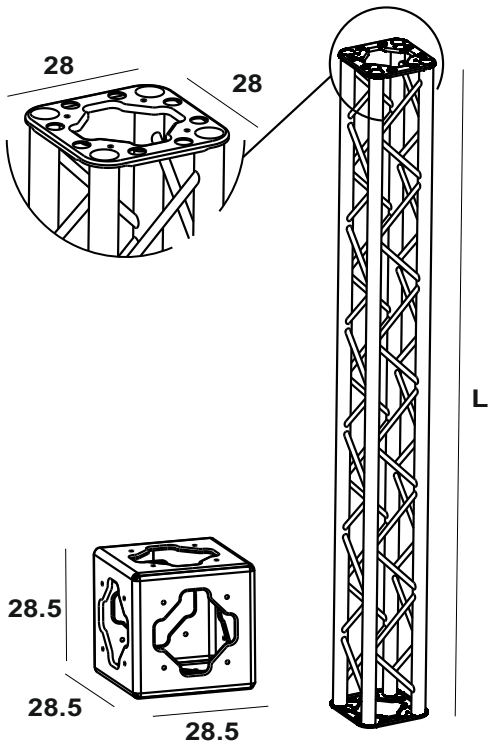

Certificate of Registration

This certificate has been awarded to

Mohandesi Tolidi Ghataate Khodro (NAHALSUN Trade Mark)

No 10, 2nd St., Derakhti St., Shahrake Andishe, Shahriar, Iran

in recognition of the organization's Quality Management System which complies with

ISO 9001:2015

The scope of activities covered by this certificate is defined below

Design and Production of Portable Barbecue and Table , Variety of Pre-built Stairs , Metal Stool, Prefabricated Style Structures

Certificate Number:	Date of Issue: (Original)	Date of Issue:
105869/A/0006/UK/En	13 April 2019	13 April 2019
Issue No:	**Expiry Date:**	
1	12 April 2022	

Issued by: *On behalf of the Schemes Manager*

If there is any doubt as to the authenticity of this certificate, please do not hesitate to contact the Head Office of the Group on info@ucsarl.fsnet.co.uk. URS is a member of United Registrar of Systems Holdings Ltd, United House, 4 Hilton Road, Manchester, M1 2BB, UK. Company Registration no. 5296440

United Registrar of Systems

Final Approval

Date: 26/Nov./2019
No:2019/URS/1719

Dear Management of Mohandesi Tolidi Ghataate Khodro (trade mark NAHALSAN)

*We have great pleasure in enclosing here with your organization certification audit for **ISO9001:2015** Registration on 26 Oct. 2019.*

Scope: *Design and manufacturing of metal chairs, tables, stand mirror, fabricating chairs, folding chairs and tables, bending metal rod productions*

Address: *No 10, 2d Street, Siri St. (Derakhti St.), Shahrake Andishe, Shahriar, Iran*

Based on this letter, you could use URS logo as attached file.
Your Certificate will be issued during 30 working days.
The first surveillance visit has been planned for Sep./2020, where the auditor will be checking your systems to ensure that these are being maintained.
We would be obliged if you would take the time to complete the enclosed Auditor Feedback Questionnaire, as information provided can assist us in improving our services.
We trust that all is satisfactory, but should you require additional information please do not hesitate to contact our office.

Yours sincerely,
Managing Director
Saeed Ehsani

United Registrar of Systems
URS
Reg No 348181

Address: 8th Unit, No.118, Darya Blvd., Sa'adat Abad, Tehran, Iran
T: +98 21 88369456 , 88369258 F: +98 21 88369259
URS Iran Agency

United Registrar of Systems

Final Approval

Date: 26/Nov./2019
No:2019/URS/1646

Dear Management of Mohandesi Tolidi Ghataate Khodro (trade mark NAHALSAN)

*We have great pleasure in enclosing here with your organization Surveillance audit for **ISO9001:2015** on 26 Oct. 2019.*

Scope: *Design and Production of Portable Barbecue and Table , Variety of Pre-built Stairs , Metal Stool, Prefabricated Style Structures*

Address: *No 10, 2d Street, Siri St. (Derakhti St.), Shahrake Andishe, Shahriar, Iran*

Based on this letter, you could use URS logo.
The second surveillance visit has been planned for Sep./2020, where the auditor will be checking your systems to ensure that these are being maintained.
We would be obliged if you would take the time to complete the enclosed Auditor Feedback Questionnaire, as information provided can assist us in improving our services.
We trust that all is satisfactory, but should you require additional information please do not hesitate to contact our office.

Yours sincerely,
Managing Director
Saeed Ehsani

United Registrar of Systems
URS
Reg No 348181

Address: 8th Unit, No.118, Darya Blvd., Sa'adat Abad, Tehran, Iran
T: +98 21 88369456 , 88369258 F: +98 21 88369259
URS Iran Agency

www.Nahalsan.com

info@paraxtech.com

info@gh-khodro.com

@Nahalsan

@Nahalsan

(+98)021- 67293
(+98)02165513646
(+98)09391600934